Maytag MDE14PDADW 02 - CONTROL CENTER

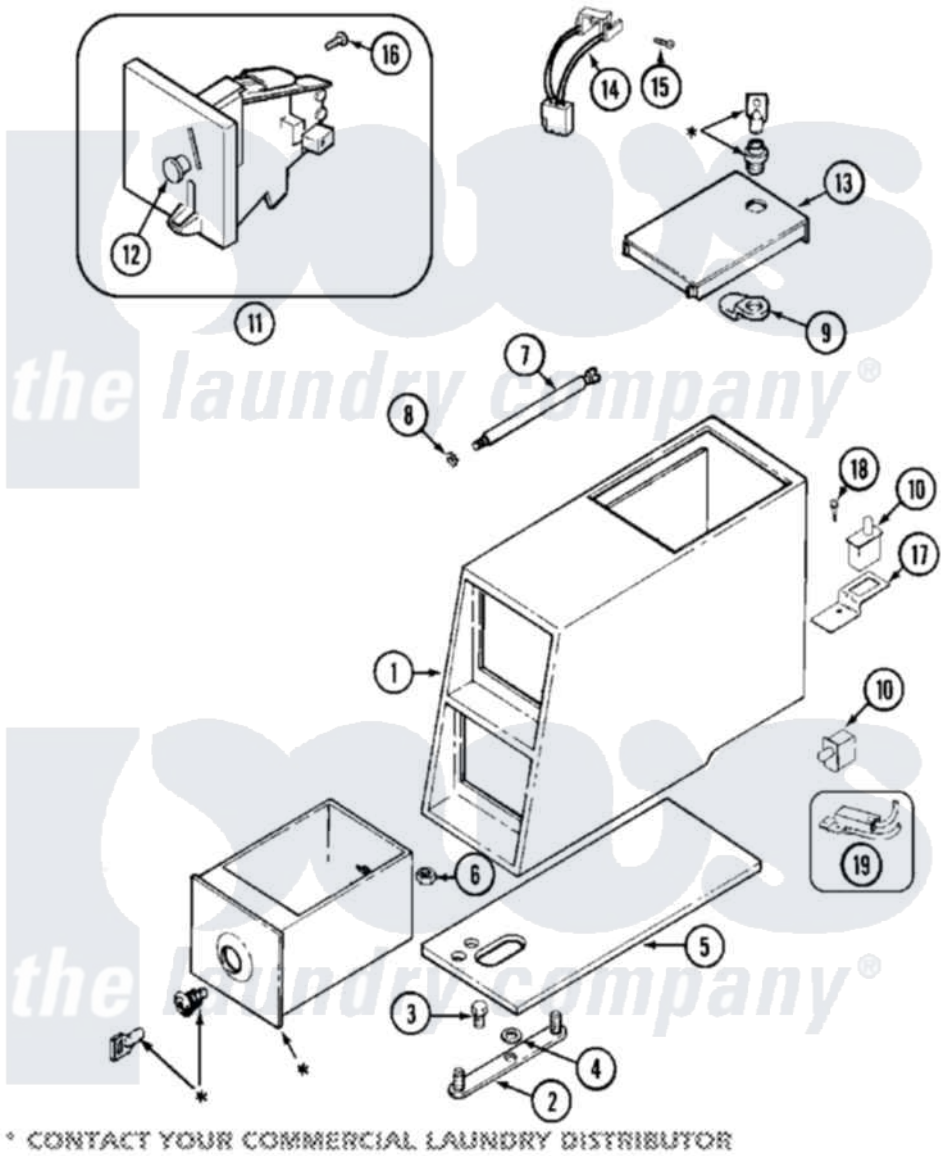

Maytag Residential Maytag MDE14PDADW Dryer Parts Parts Diagram 02 - CONTROL CENTER
Click on the part number to view part

Item	Original Part Number	Replaced By	Status	Part Description
001	212276	W10116760		Screw
"	22002480			Vault, Coin PD Coin Drop Supplied By Dist.
"	22002481	22002480		Vault, Coin PD Coin Drop Supplied By Dist.
002	22001810		Not Available	STRAP, MOUNTING
003	22001996	3370225		Screw
004	910309			Washer, Mounting Strap
005	22002072			Gasket, Control Center
"	22002073	22002618		Gasket, Control Center
006	Y052740	62739		Nut, Lock
007	213035			Bolt, Locking
008	910181			Lockwasher, Terminal Block
009	NLA		Not Available	CAM, LOCKING
010	33001250			Switch, Vault And Service Door
011	22001873	22004112		Coin Drop Greenwald Us.25

"	22001875		Coin Drop Assembly-Dual
"	22002144		Single Faceplate
"	22002535	W10133245	Dual Coin Drop Assembly
"	22003815		Dual Faceplate
012	216200		Face Plate Return Button
013	22001910	22003679	Timer Access Door Assembly
"	22001911	22003692	Timer Access Door Assembly
014	22001965		Optic Switch Assembly
015	314665		Screw, Switch Assembly
016	216068		Screw, Coin Drop
017	22001404		Bracket, Service Switch
018	212276	W10116760	Screw
019	22001966		Harness, Sensor Switch

the laundry company®
the laundry company®
the laundry company®