Maytag MDE6400AGW 05 - MOTOR DRIVE

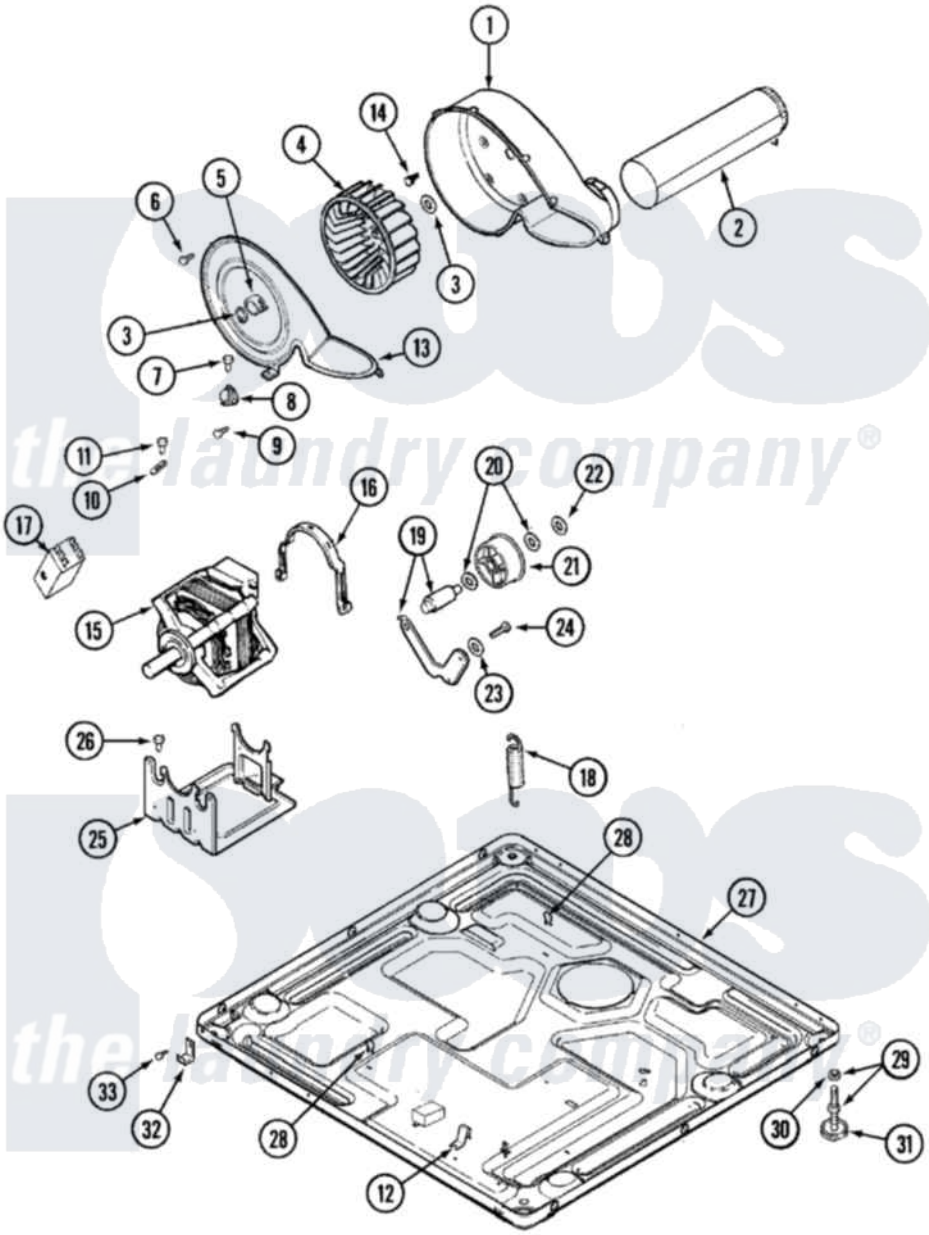

Maytag Residential Maytag MDE6400AGW Dryer Parts Parts Diagram 05 - MOTOR DRIVE
Click on the part number to view part

Item	Original Part Number	Replaced By	Status	Part Description
1	33001789			Housing, Blower
2	211294	90767		Screw, 8A X 3/8 HeX Washer Head Tapping
"	33001800			Duct Assembly, Exhaust
3	410233	9703438		Ring-Retnr
4	33002797			Wheel, Blower
"	33002797			Wheel, Blower
5	312967			Clamp, Blower Housing
6	33001855	33002917		Screw, No.10-16
7	Y313561			Screw----NA
8	307249			Thermostat, Multi-Temp
9	22002925	3370225		Screw
10	33001762			Fuse, Thermal
11	211294	90767		Screw, 8A X 3/8 HeX Washer Head Tapping
12	22002244			Clip, Grounding
13	303396			Thermostat, Hi-Limit

"	33001873			Cover, Blower Housing----NA
14	Y310632	1163839		Screw
15	33002796	W10197708		Motor-Drve
16	33002221	Y015825		Clip, Motor To Motor Support
17	Y310632	1163839		Screw
18	33002157			Grommet
"	33002460	33002459		Assembly, Spring And Plug
19	33001840	6-3705180		Idler Arm
20	Y312527			Washer, Idler Shaft
21	33001783	6-3700340		Bearlng- I
22	312958	354987		Ring, Retaining
23	315772			Sleeve, Idler Arm
24	Y014874			Screw, Idler Arm And Sleeve
25	33002817			Motor Support, Offset
"	Y313561			Screw----NA
26	Y313561			Screw----NA
27	33002465		Not Available	BASE, (LWR)----NA
28	410490			Spring, Retainer Wire Harness
29	Y305086			Adjustable Leg And Nut
30	Y052740	62739		Nut, Lock
31	Y314137			Foot, Rubber
32	22002239			Clip, Front Panel
33	33002190			SCrew, C BraCe, BraCket, Cabinet

the laundry company®