Maytag MDE9766AZW 06 - MOTOR DRIVE

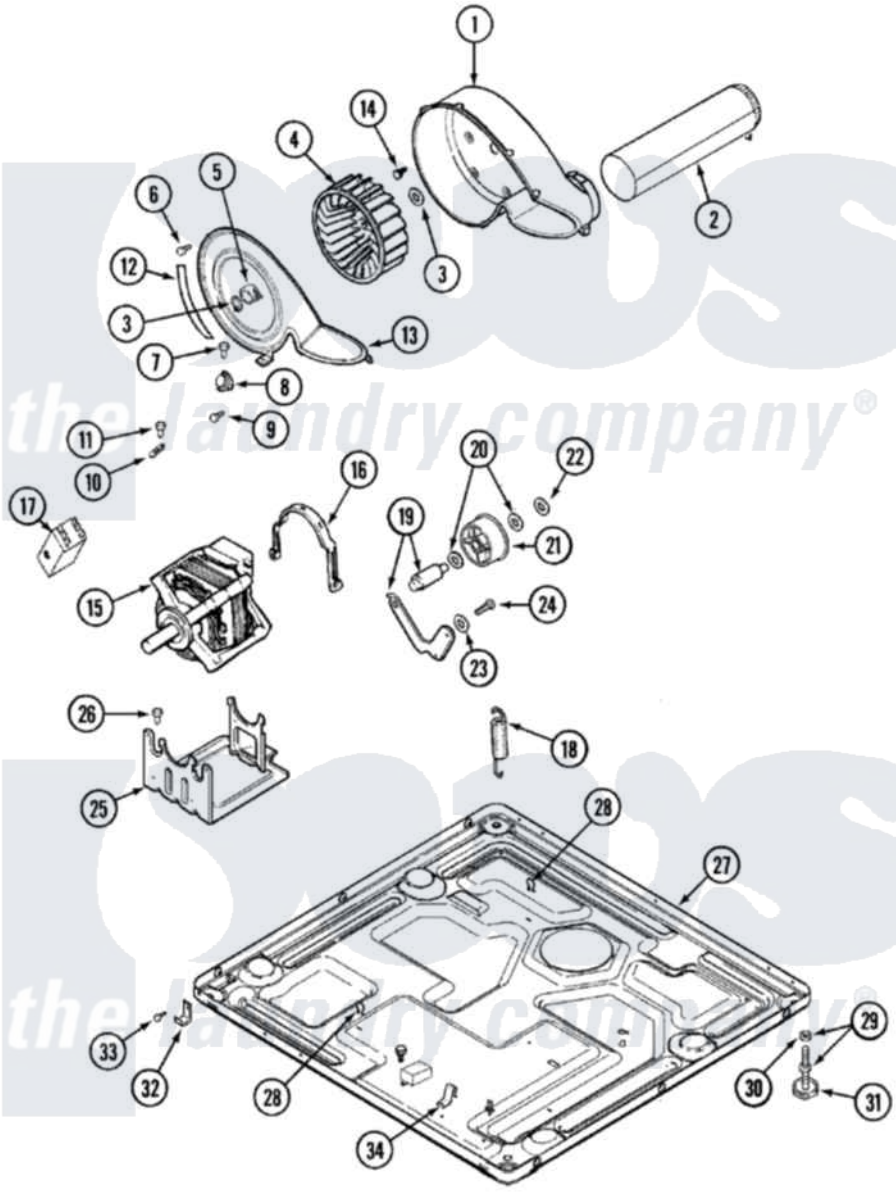

Maytag Residential Maytag MDE9766AZW Dryer Parts Parts Diagram 06 - MOTOR DRIVE
Click on the part number to view part

Item	Original Part Number	Replaced By	Status	Part Description
1	33001789			Housing, Blower
2	33001800			Duct Assembly, Exhaust
"	22001995			Screw Note: Screw, Tumbler Front And Shroud
3	410233	9703438		Ring-Retnr
4	33001790			Wheel, Blower
5	312967			Clamp, Blower Housing
6	33001855	33002917		Screw, No.10-16
7	Y313561			Screw----NA
8	306911			Thermostat, Multi-Temp
9	22001996	3370225		Screw
10	33001762			Fuse, Thermal
11	314848	W10116760		Screw
12	33001772		Not Available	SEAL, BLOWER COVER
13	33001873			Cover, Blower Housing----NA
14	314818	1163839		Screw
15	33002237	33002478		Motor

"	33002462	33002478		Motor
"	33001853	33002478		Motor
16	Y015825			Clip, Motor To Motor Support
17	33001854	33002478		Motor
18	33002460	33002459		Assembly, Spring And Plug
"	33002461			Plug For Spring
"	33001754	33002459		Assembly, Spring And Plug
19	33001840	6-3705180		Idler Arm
20	Y312527			Washer, Idler Shaft
21	33001783	6-3700340		Bearlng- I
22	312958	354987		Ring, Retaining
23	315772			Sleeve, Idler Arm
24	Y014874			Screw, Idler Arm And Sleeve
25	Y313561			Screw----NA
"	33002466	33002817		Motor Support, Offset
"	33001752	33002817		Motor Support, Offset
26	Y313561			Screw----NA
27	33001845		Not Available	BASE
"	33002465		Not Available	BASE, (LWR)----NA
28	410490			Spring, Retainer Wire Harness
29	Y305086			Adjustable Leg And Nut
30	Y052740	62739		Nut, Lock
31	Y314137			Foot, Rubber
32	22002239			Clip, Front Panel
33	Y310632	1163839		Screw
34	22002244			Clip, Grounding