Maytag MDG100PN1L 13 - SAIL SWITCH BURNER HI-LIMIT

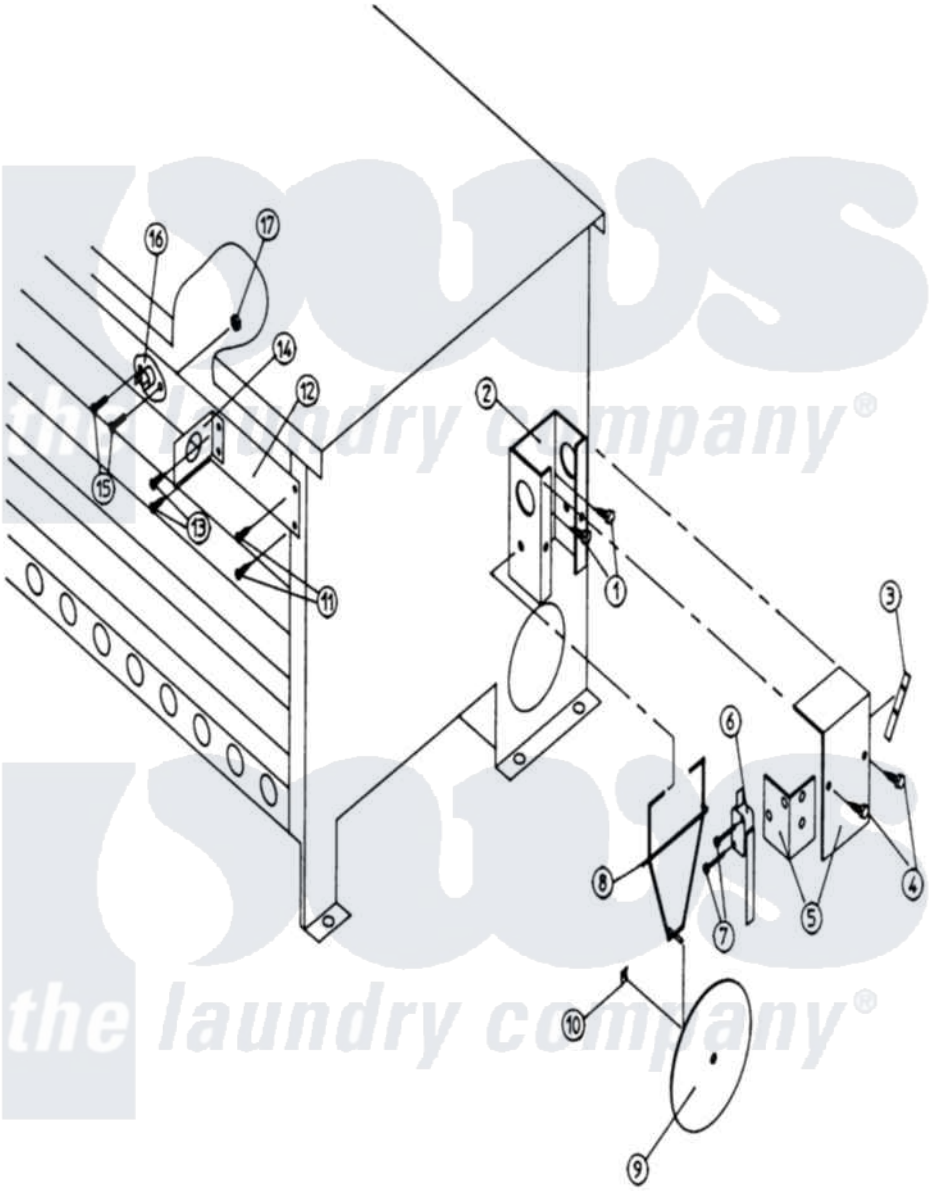

Maytag Residential Maytag MDG100PN1L Dryer Parts Parts Diagram 13 - SAIL SWITCH BURNER HI-LIMIT
Click on the part number to view part

Item	Original Part Number	Replaced By	Status	Part Description
000	W10124350		Not Available	ORDER PARTS FROM AMERICAN DRYER CORP AT 508-678-9000
001	A150300	5307527001		Switch
002	A802800	802800		Sail Switch
"	A802801	802801		Sail Switch
003	A154004	154004		Tinnerman
004	A150415		Not Available	SCREW, CRIMPTITE (PH. RD.HD.) (No.10-16 X 1/2`` PH. RD. HD.)
005	A802799	802799		Sail Sw.bo
006	A122200	122200		Sail Switch
007	A150303	150303		4 X 3 4 P
008	A105500	W10146641		Std Sail S
009	A319202	W10146866		Sail Switch
010	A154002	154002		1 8 Push O
011	A150300	5307527001		Switch
012	A319702	319702		100 Hi LI

013	A150300	5307527001	Switch
014	A319703	319703	100 120 Hi
015	A150001	150001	6-32 X 1 2
016	A130401		HI-LIMIT (ONLY) (330 DEG.)
017	A151000	WH12X195	Switch Assembly

the laundry company®
the laundry company®
the laundry company®