Maytag MDG16PDDWW 01 - CONTROL PANEL

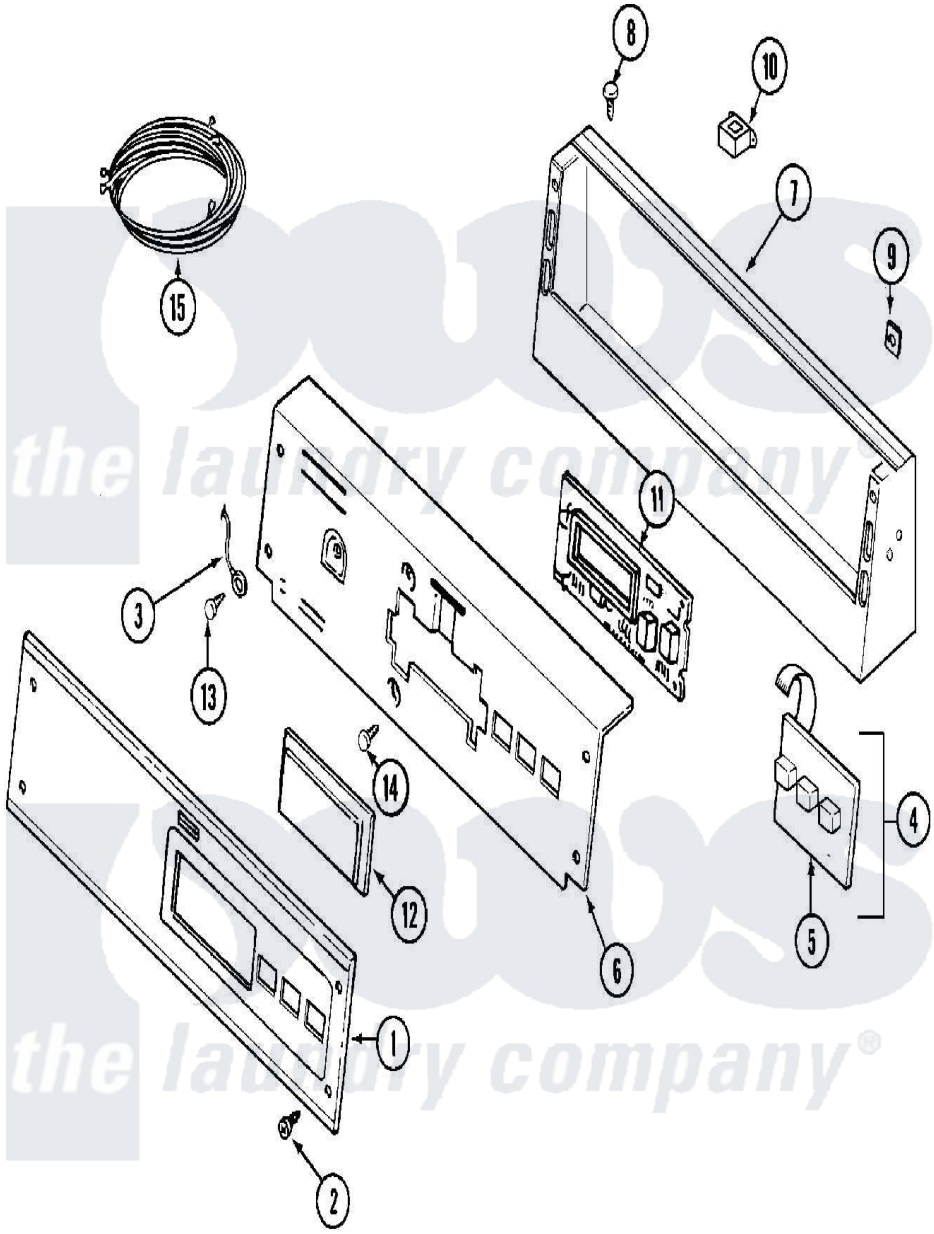

Maytag Residential Maytag MDG16PDDWW Dryer Parts Parts Diagram 01 - CONTROL PANEL
Click on the part number to view part

Item	Original Part Number	Replaced By	Status	Part Description
001	33002941			Facia - Pd/Ps
002	215506			Screw, Control Panel Overlay
003	22001959			Wire, Ground
004	215527	W10140652		Screw, 6-20 X 1/2
"	306694			Backup Plate With Switch
005	33002863	W10131113		Push Button
006	22002954			Deflector, Water
"	33002519			Bracket, Back
007	22003089			Console
008	22001996	3370225		Screw
009	215003			Fastener, Panel And Bracket
010	22001960			Transformer
"	22002925	3370225		Screw
011	33001204			Stand-Off, Ccontrol Board
"	33002358	W10130081		Control Board
012	22001962	W10131114		Cover, Display

013	211252	Screw, Ground Wire
014	215526	Screw, Circuit Board
015	22003818	Wire Harness
016	33002671	Use And Care Manual

the laundry company®
the laundry company®
the laundry company®