# Maytag MDG26MNABL 03 - MN CONTROL PANEL

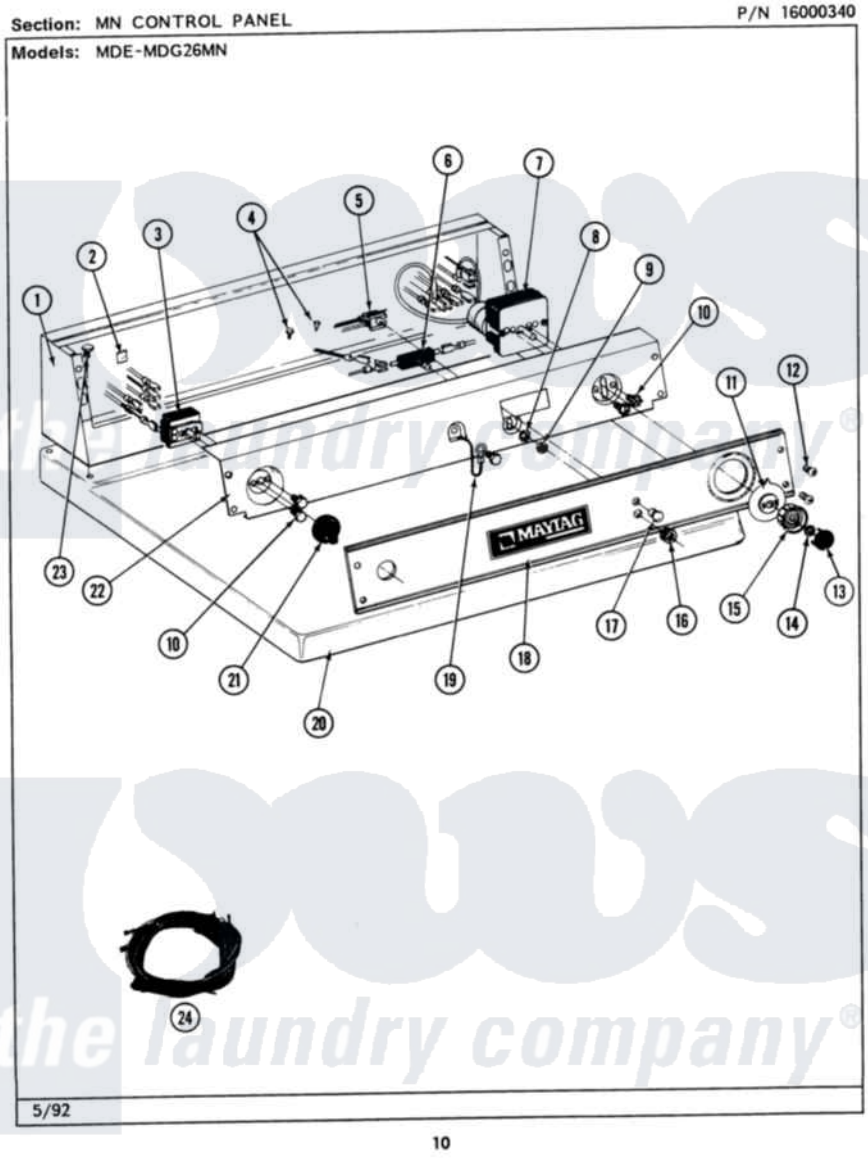


Maytag Residential Maytag MDG26MNABL Dryer Parts Parts Diagram 03 - MN CONTROL PANEL
Click on the part number to view part

| Item | Original Part Number | Replaced By | Status | Part Description |
|---|---|---|---|---|
| 001 | NLA | | Not Available | CONSOLE (WHT) |
| 002 | 215003 | | | Fastener, Panel And Bracket |
| 003 | 307237 | W10327105 | | Switch, Cycle Selection |
| 004 | 211294 | 90767 | | Screw, 8A X 3/8 HeX Washer Head Tapping |
| " | Y314322 | 211251 | | Screw, Transformer |
| 005 | 204075 | | Not Available | PILOT LAMP (DG MODELS ONLY) |
| 006 | 306940 | W10149462 | | Switch, Push-To-Start |
| 007 | 305214 | | | Timer |
| " | Y304585 | | | Timer Motor RPR For 305214 Timer Only |
| 008 | 312751 | | | Lockwasher, Start Switch |
| 009 | Y312706 | 422617 | | Nut |
| 010 | Y313588 | 488234 | | Screw 8-32 X 1/4 |
| 011 | 314725 | 33001500 | | Dial, Timer Indicator |
| 012 | 212277 | | | Screw, No.8 X 1/2 Inch |

| | | | | |
|---|---|---|---|---|
| 013 | 314723 | W10133501 | | Cap, Knob |
| 014 | 312273 | | | Nut, Control Knob |
| 015 | 314724 | | | Knob For Timer |
| 016 | Y312702 | | | Knurled Nut, Start Switch |
| 017 | 215564 | | | Lens, Indicator Light |
| 018 | 314909 | 33001021 | | Panel, Control |
| 019 | 205810 | | | Wire, Ground |
| " | 211252 | | | Screw, Ground Wire |
| 020 | 307104 | | | Top Cover Assembly |
| " | NLA | | Not Available | (ALM) |
| 021 | 306938 | | | Knob, Selector Switch |
| 022 | NLA | | Not Available | BACK UP PLATE (WHT) |
| 023 | 212276 | W10116760 | | Screw |
| 024 | 308510 | | | Wire Harness, Main |
| " | NLA | | Not Available | WIRE HARNESS |

the laundry company®
the laundry company®
the laundry company®