Maytag MDG27PCAAL 06 - GAS VALVE

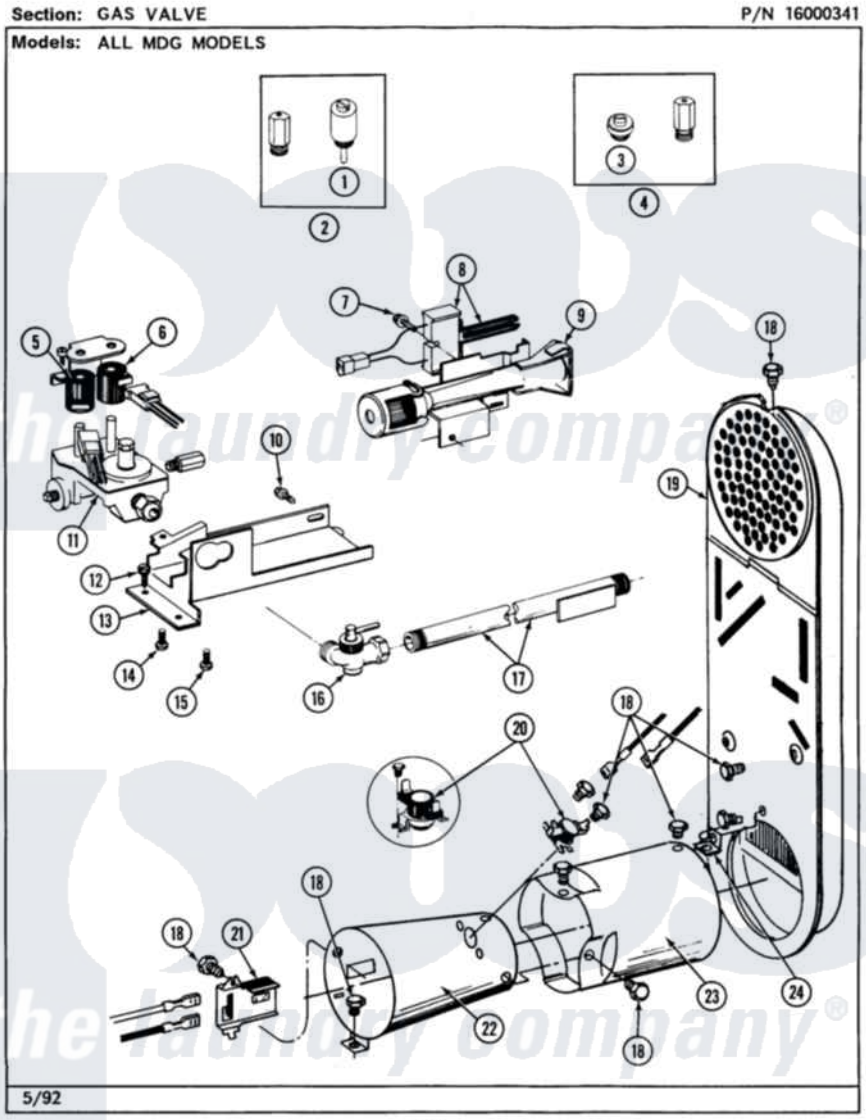

Maytag Residential Maytag MDG27PCAAL Dryer Parts Parts Diagram 06 - GAS VALVE
Click on the part number to view part

Item	Original Part Number	Replaced By	Status	Part Description
001	306184		Not Available	PLUG, BLOCKING (LPG REGULATOR)
002	Y308378	W10402145		LP Gas Con
003	314602	694424		Leak, Limiter
004	Y308377		Not Available	CONVERSION KIT (LP TO NATURAL)
005	306106			Coil, Holding And Booster--W
006	306105	694540		Coil, 60 Hz
007	304971			Screw Note: Screw, Igniter
008	304970	4391996		Ignitor
009	304974	33002793		Burner Assembly
"	Y308457	33002793		Burner Assembly
010	Y310632	1163839		Screw
011	308345			Valve, Gas
012	Y313561			Screw----NA
013	314566			Gas Control Bracket
014	314082	90767		Screw, 8A X 3/8 HeX Washer

014	314082	90767		Head Tapping
015	Y313559			Screw
016	Y303349			Angle Shut-Off, Gas Valve
017	Y303383	33001735		Pipe And Bracket Assembly Series 18 Not Needed Use Vavle
018	211294	90767		Screw, 8A X 3/8 HeX Washer Head Tapping
019	307119			Duct, Inlet Assembly
"	Y308504		Not Available	INLET DUCT ASSEMBLY
020	305169			Thermostat, Hi-Limit Gas
021	Y303377	338906		Radiant, Sensor
022	Y303368			Cone, Combustion
"	Y308548			Combustion Cone Assembly
023	Y303841			Cone, Extension
024	Y312890			Retainer, Heater Chamber

the laundry company®
the laundry company®
the laundry company®