Maytag MDG30PC2AL 09 - CABINET - LINT DOOR ASSEMBLY (PC2)

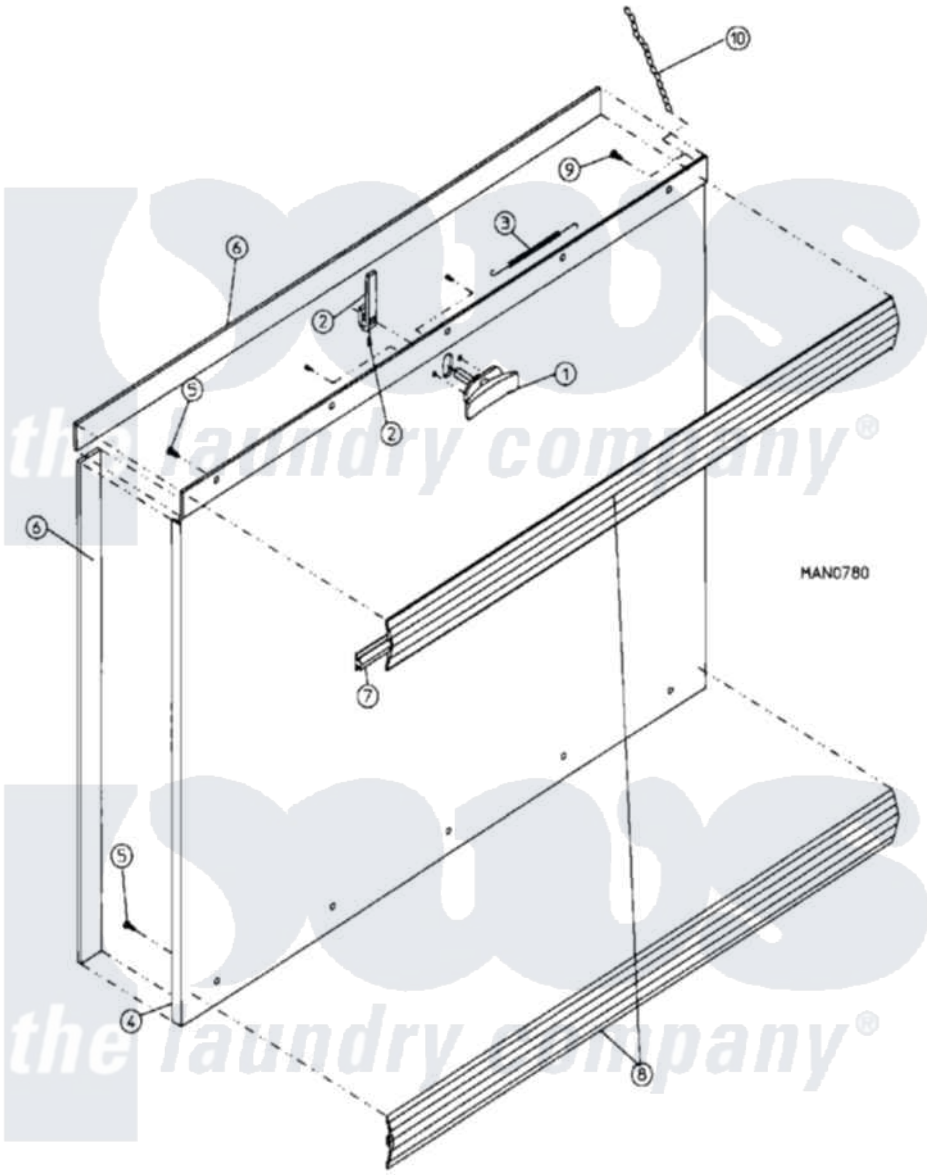

Maytag Residential Maytag MDG30PC2AL Dryer Parts Parts Diagram 09 - CABINET - LINT DOOR ASSEMBLY (PC2)
Click on the part number to view part

Item	Original Part Number	Replaced By	Status	Part Description
000	W10124350		Not Available	ORDER PARTS FROM AMERICAN DRYER CORP AT 508-678-9000
001	A160001		Not Available	LOCK ASSEMBLY W/KEY
"	A160103	160103		Key For Ad
"	A160104	160104		Key For Mk
002	A150425	W10146763		12-24 X 3
"	A160008	160008		2 1 2 Str
003	A157000			SPRING-DRO
004	A800216	W10149260		30 Drop L
"	A800233	W10146996		30 Insul.
005	A150201	150201		10-32 X 1
006	A117604	117604		1 8 Thk X
007	A102307		Not Available	GASKET, TRIM BUMPER (SOLD IN FEET)
008	A180202		Not Available	TOP TRIM STRIP W/LOCK HOLE (38-1/4`` LENGTH)
009	A150418	150418		Dlh 4 X .1

"	A150419	150419	6 X 1 2 T
010	A108120	108120	Chain For