Maytag MFS35PNAVS 09 - WASH DRUM AND TUB

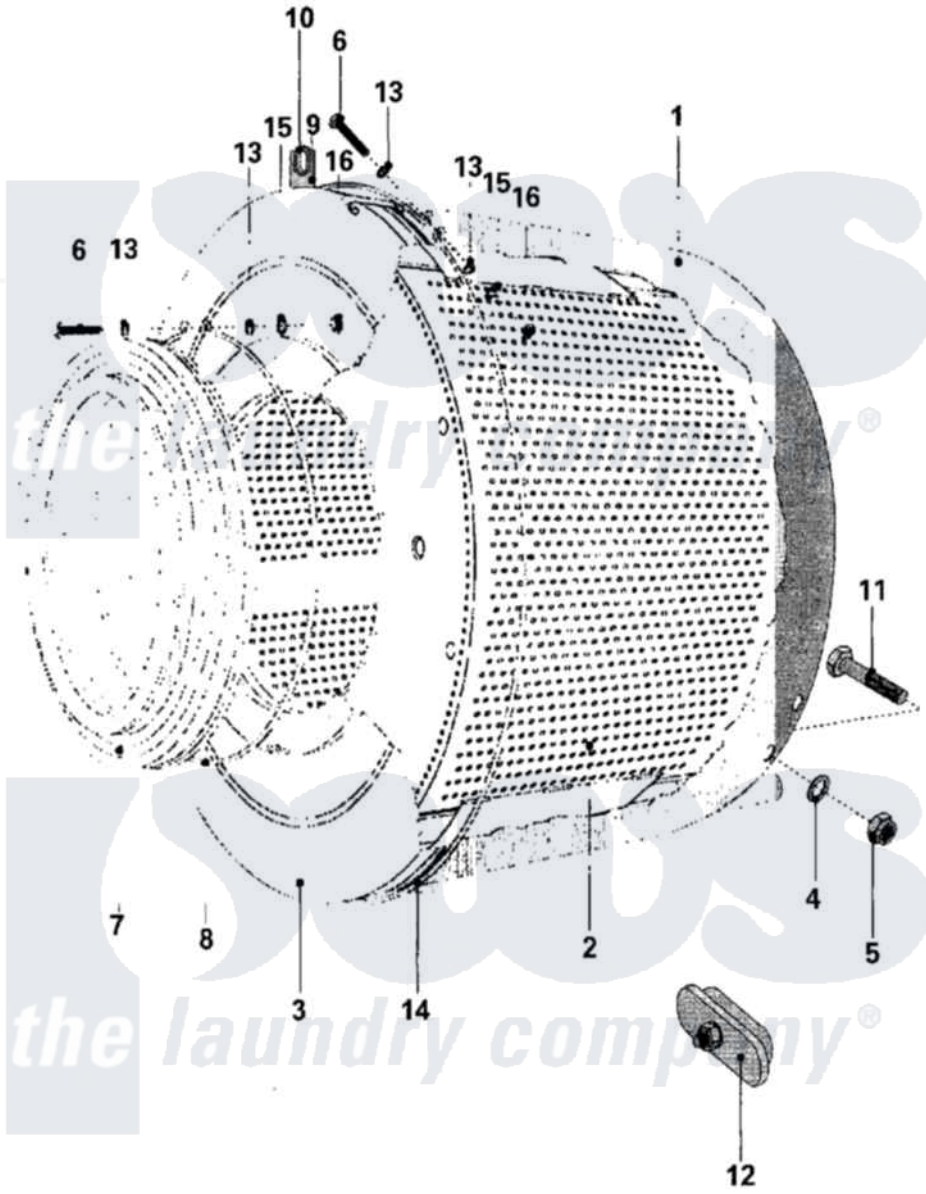

Maytag Residential Maytag MFS35PNAVS Washer Parts Parts Diagram 09 - WASH DRUM AND TUB
Click on the part number to view part

Item	Original Part Number	Replaced By	Status	Part Description
001	23003599			Tub
002	23003600			Drum
003	23003601			Plate, Drum
004	NLA		Not Available	WASHER
005	NLA		Not Available	NUT (M16)
006	23003541			Screw
007	23003536			Housing, Tub
008	23003537			Bellow To Tub Clamp
009	23003538			Holder
010	23003539			Balance Switch Grommet
011	23003595			Screw
012	23001594			Heating Element Hole Plug
013	23001309			Washer Lu
014	23003603			Ring Ii
015	23001028	23002756		Lockwasher
016	23003606			Nut