Maytag MGD6000XW1 02 - CABINET PARTS

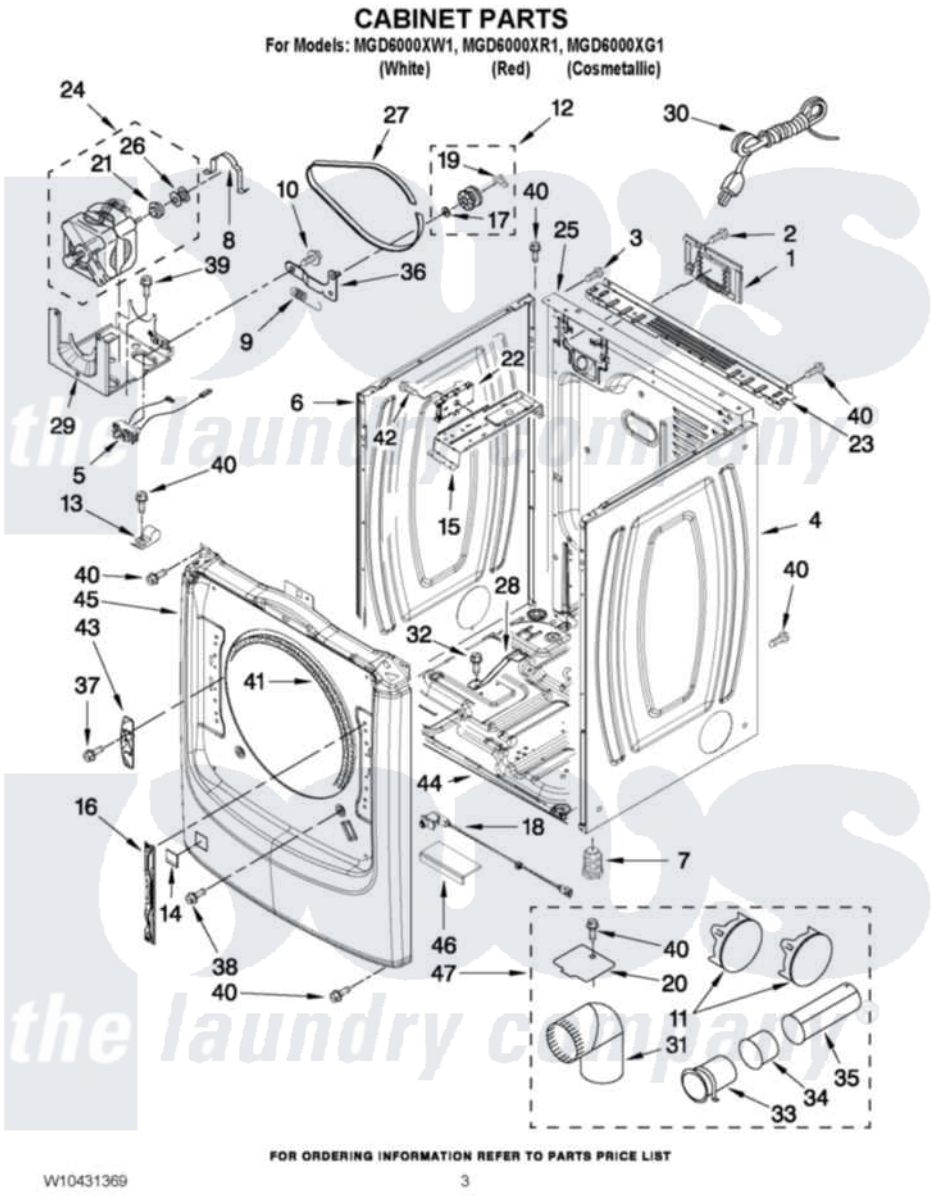

Maytag Residential Maytag MGD6000XW1 Dryer Parts Parts Diagram 02 - CABINET PARTS
Click on the part number to view part

Item	Original Part Number	Replaced By	Status	Part Description
1	8317339			Cover, Terminal Block
2	3390814	90767		Screw, 8A X 3/8 HeX Washer Head Tapping
3	8533974	4331106		Screw, No.10-32 X 7/16
4	W10280028			Panel, Side
"	W10337791			Panel, Side
"	W10301059			Panel, Side
5	W10246525	W10314253		Switch, Assembly Broken Belt
6	W10192435			Panel, Side
"	W10337789	W10468502		Panel, Side
"	W10301058			Panel, Side
7	3392100	49621		Feet-Leveling
NI	279810			Foot-Optional
8	W10121316			Plug, Multivent
9	3387374			Spring, Idler
10	3389420			Retainer-Idler 1/4-20 X 1/16
11	49252			Plug, Multivent

"	W10151499	W10404617	Plug, Multivent
12	3388672	279640	Pulley-Idr
13	3978776		Bracket, Gas Pipe Switch
14	8564457		Plug, Front Panel
"	W10256411		Plug, Front Panel
"	W10301055		Plug, Front Panel
15	W10259611		Bracket, Control
16	W10315109		Bracket, Door Hinge
17	W10121334		Washer, Thrust
18	W10295361		Assembly, Door Switch
19	690997		Washer, Thrust
20	8066115	3394331	Plate Cover
21	3393657		Restrainer, Belt
22	W10352731		Control Board
23	W10208382		Bracket, Rear Dryer
24	W10356941		Motor, Assembly 60 Hz
25	W10247569		Panel, Rear
26	3389729		Pulley, Motor
27	W10112954		Belt, Drive
28	8529757		Bracket, Burner
29	W10242878		Bracket, Motor Mounting
30	3401401	3401402	Cord, Power
31	49026		4" - 90° Elbow
32	693995		Screw, Hex Head
33	8563747		Exhaust Pipe Medium Pipe
34	8563750		Exhaust Pipe
35	8563749		Exhaust Pipe
36	3388674	W10118756	Idler Bracket
37	W10288126		Screw, 10-32 X 1/2
38	3357011	308685	Side Trim)
39	343641	681414	Screw, 10AB X 1/2
40	3390647	488729	Screw
41	3387242		Seal, Front Panel
42	693995		Screw, Hex Head
43	W10208250		Strike, Door
44	8565046		(BROKEN BELT BASE, CABINET SWITCH)
45	W10294349		Panel, Front
"	W10337786		Panel, Front
"	W10301067		Panel, Front
46	W10215725		Cover, Door Switch
NI	W10331132		Dryer Exhaust Kit

the laundry company®