# Maytag MGDZ400TQ2 03 - BULKHEAD PARTS

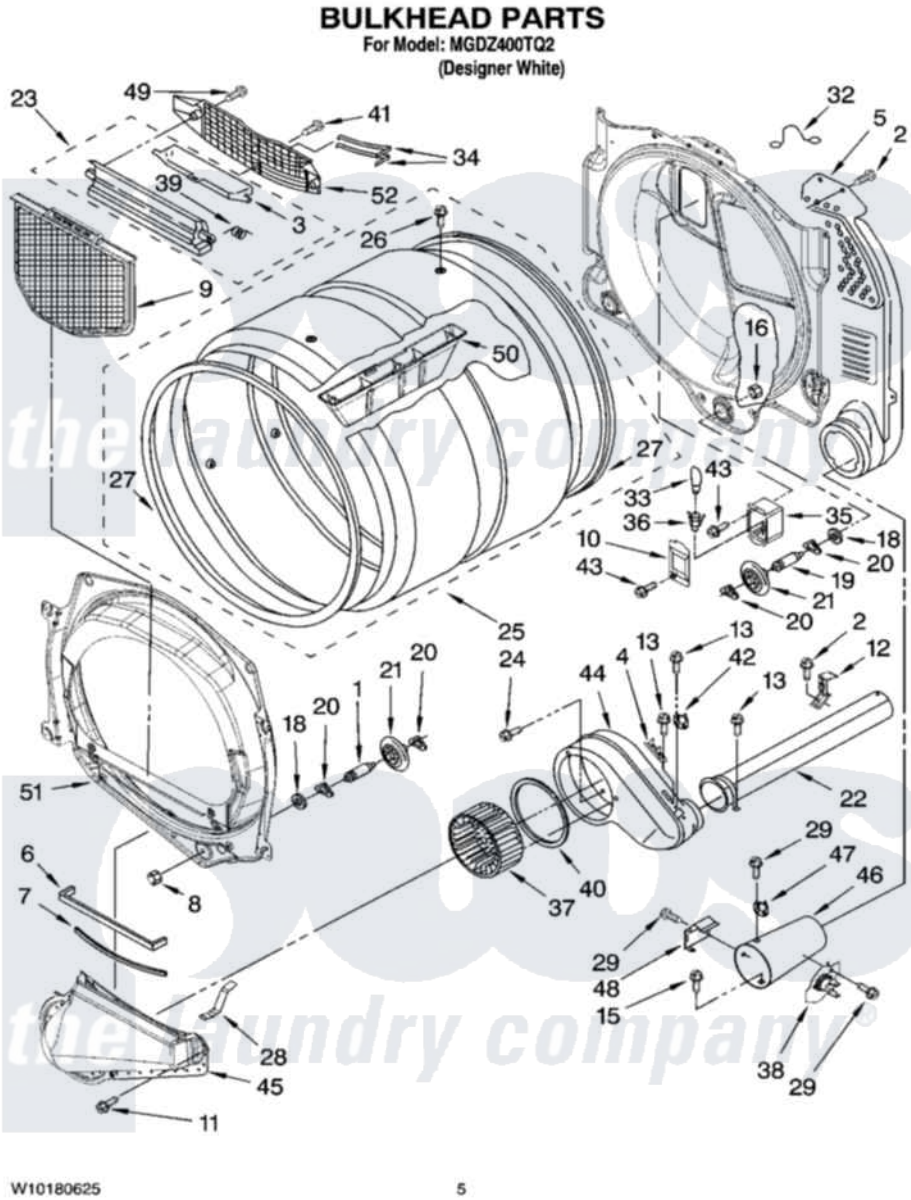


Maytag Residential Maytag MGDZ400TQ2 Dryer Parts Parts Diagram 03 - BULKHEAD PARTS
Click on the part number to view part

| Item | Original Part Number | Replaced By | Status | Part Description |
|---|---|---|---|---|
| 1 | 8575324 | W10359271 | | Shaft, Drum Roller Threads |
| 2 | 3390647 | 488729 | | Screw |
| 3 | W10153413 | | | Door, Lint Screen |
| 4 | 3392519 | | | Thermal Limiter |
| 5 | 3394346 | | | Air Duct Assembly |
| 6 | 697813 | | | Seal, Outlet Housing |
| 7 | 697814 | 697813 | | Seal, Outlet Housing |
| 8 | 3934666 | W10080210 | | Nut, 3/8 X 16 |
| 9 | W10049370 | W10120998 | | Screen |
| 10 | 3402841 | 8532165 | | Lens, Drum Light |
| 11 | 359625 | 487240 | | Screw, For Mtg. Service Capacitor |
| 12 | 8572105 | | | Retainer, Toe Panel |
| 13 | 8533971 | 90767 | | Screw, 8A X 3/8 HeX Washer Head Tapping |
| 15 | 693995 | | | Screw, Hex Head |
| 16 | W10001120 | W10080190 | | Nut, 3/8-16 |

| | | | |
|---|---|---|---|
| 17 | W10080170 | | Bulkhead, Rear |
| 18 | 3387459 | W10080960 | Washer, Support |
| 19 | 8575325 | W10359272 | Shaft, Roller Drum Threads |
| 20 | 690997 | | Washer, Thrust |
| 21 | 8536973 | W10314173 | Support |
| 22 | 8563728 | | Exhaust Pipe |
| 23 | W10153423 | | Outlet Grille, Housing Assembly |
| 24 | 489463 | | Screw, 8-18 X 1/16 |
| 25 | W10153420 | | Complete Drum Assembly |
| 26 | W10109200 | | Screw, Baffle Mounting |
| 27 | 697694 | 280114 | Seal |
| 28 | 8066208 | | Clip-Exhaust |
| 29 | 90767 | | Screw, 8A X 3/8 HeX Washer Head Tapping |
| 32 | 3401707 | | Jumper, Tco-High Limit |
| 33 | 3406124 | 22002263 | Lamp |
| 34 | 3387223 | | Electrode, Sensor |
| 35 | 8578825 | | Bracket, Drum Light |
| 36 | W10136369 | | Socket, Drum Light Assembly |
| 37 | 697772 | | Wheel, Blower |
| 38 | 8573713 | | Thermal-Cutoff |
| 39 | 3394986 | | Spring, Lint Screen Door |
| 40 | 697770 | | Seal, Cover Plate Blower Housing |
| 41 | 695240 | 488729 | Screw |
| 42 | 8577274 | | Thermostat 295F |
| 43 | 487909 | 488729 | Screw |
| 44 | 8544362 | W10119255 | Housing, Blower |
| 45 | 8066168 | W10128606 | Duct-Lint |
| 46 | 8573824 | | Funnel, Burner |
| 47 | 8573028 | | Thermostat, High-Limit 205 F |
| 48 | 338906 | | Radiant, Sensor |
| 49 | 3387230 | | Screw, 10-16 X 13/16 |
| 50 | W10153409 | | Baffle, Drum |
| 51 | 8565061 | | Bulkhead, Front |
| 52 | W10153412 | | Grille, Outlet |

the laundry company®