Maytag MLE20PRAZW0 11 - TUB AND BASKET PARTS

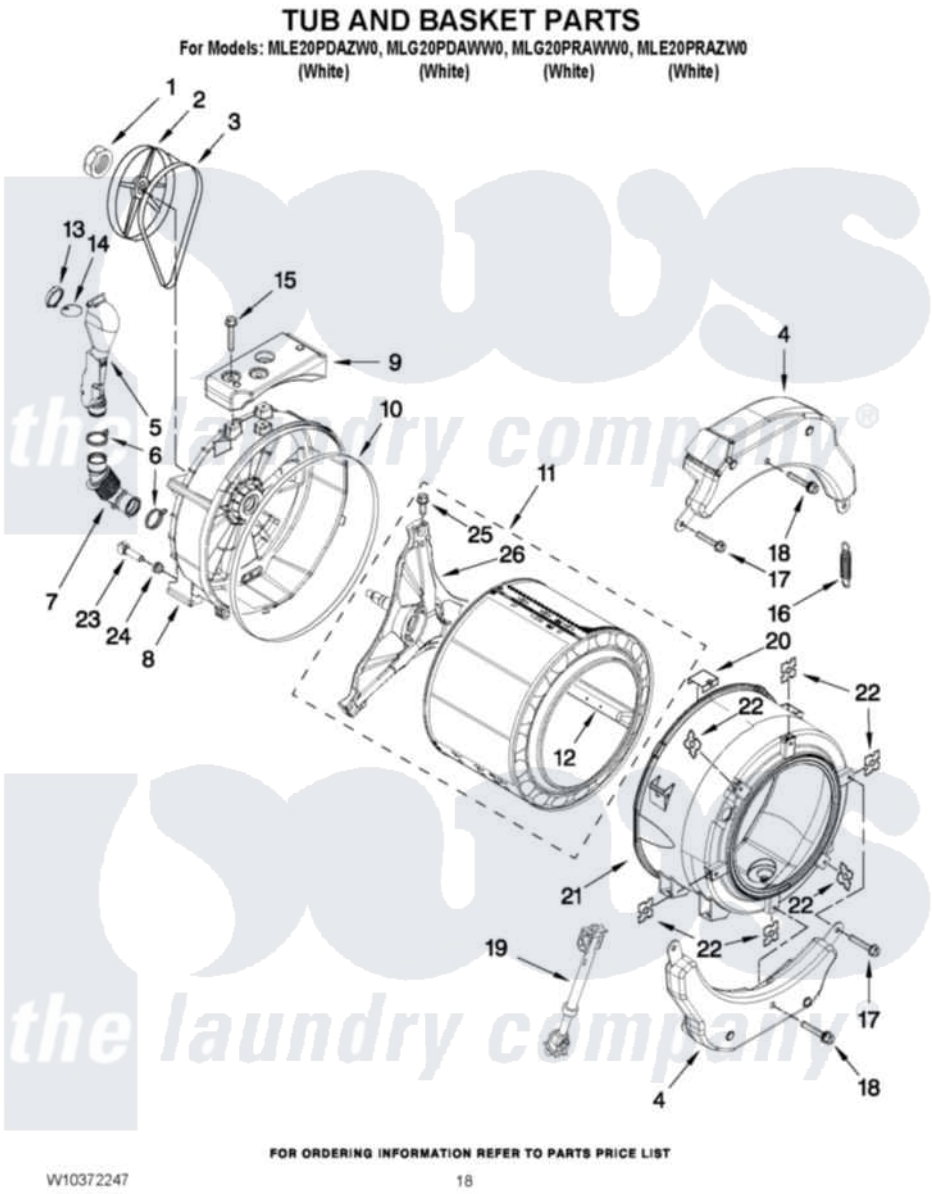

Maytag Residential Maytag MLE20PRAZW0 Washer/Dryer Parts Parts Diagram 11 - TUB AND BASKET PARTS
Click on the part number to view part

Item	Original Part Number	Replaced By	Status	Part Description
1	8533999	W10283361		Nut, Pulley
2	8540088C			Pulley
3	W10260319			Belt, Drive
4	W10223198			Counterweight, Front
5	W10142720			Pipe, Ventilation
6	8540010	W10208156		Clamp
7	8540019			Hose, Exhaust
8	W10303574	W10355044		Tub-Outer
9	W10200747			Counterweight, Rear
10	8540090	W10111158		Gasket
11	W10303571			Basket, Complete
12	W10118982			Baffle, Tub
13	W10142721			Connector -Ventilation
14	W10142722			Flap - Ventilation
15	W10246531			Screw, Rear Counterweight
16	W10010360	280159		Spring

17	W10094780	W10182109	Screw-Kit
18	W10259288		Bolt Assembly, Counterweight Center Hole
19	W10015830		Shock Absorber
20	8540092		Clamp, Tub
21	W10266965	W10312454	Tub-Outer
22	8540072	8182512	Nut, Push-In
23	W10176659	8181705	Ntc
24	8540766		Seal, Rubber
25	8540382		Screw
26	8540342		Crosspiece Assembly

the laundry company®
the laundry company®
the laundry company®