Maytag MLG15PDAXA 07 - GAS VALVE

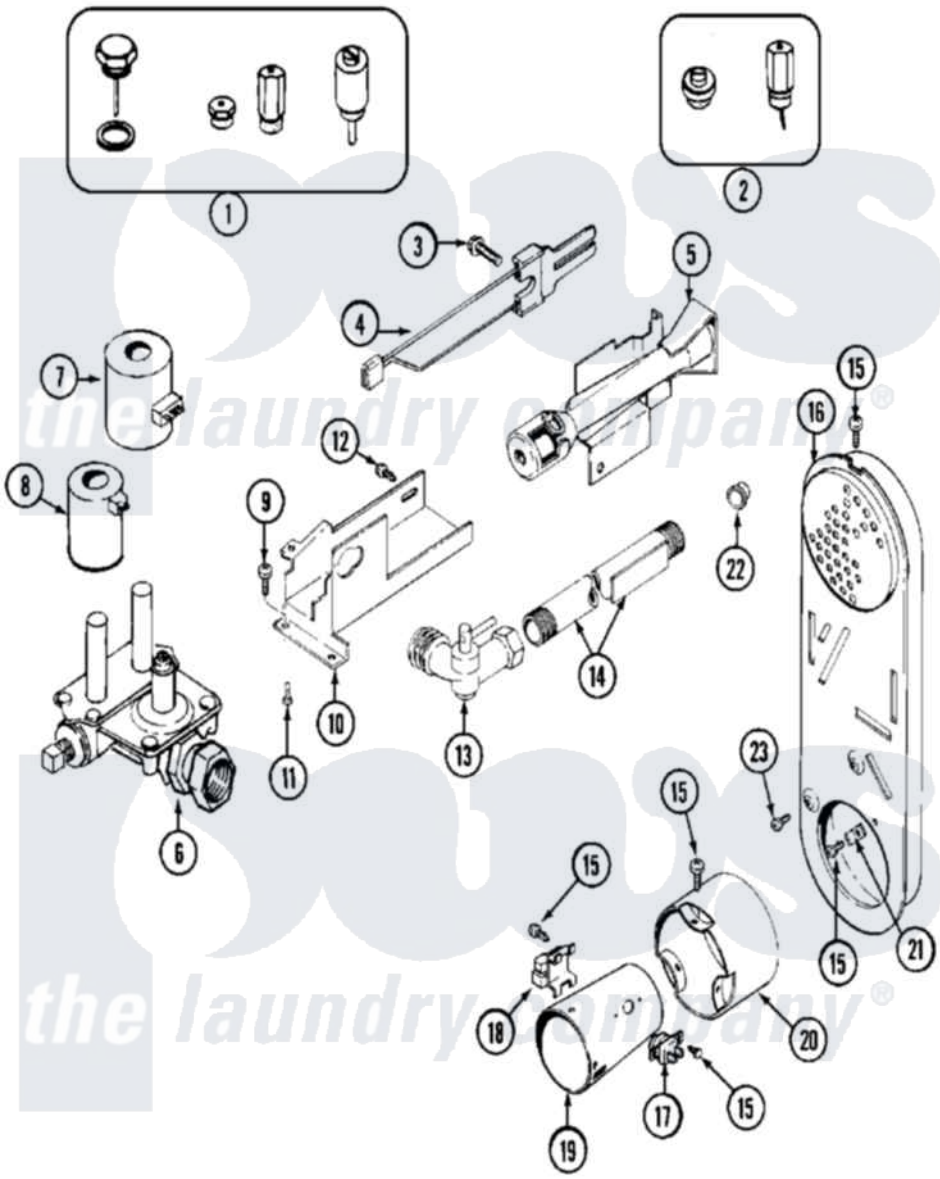

Maytag Residential Maytag MLG15PDAXA Dryer Parts Parts Diagram 07 - GAS VALVE
Click on the part number to view part

Item	Original Part Number	Replaced By	Status	Part Description
001	Y308378	W10402145		LP Gas Con
002	Y308377		Not Available	CONVERSION KIT (LP TO NATURAL)
003	304971			Screw Note: Screw, Igniter
004	304970	4391996		Ignitor
005	33001247	33002793		Burner Assembly
006	308345			Valve, Gas
"	33002056		Not Available	PLUG, HOLE (UPR)
007	306106			Coil, Holding And Booster--W
008	306105	694540		Coil, 60 Hz
009	Y313561			Screw----NA
010	NLA		Not Available	BRACKET, GAS VALVE (LWR)
011	314082	90767		Screw, 8A X 3/8 HeX Washer Head Tapping
"	314568	Y313559		Screw
012	22001995			Screw Note: Screw, Tumbler Front And Shroud

013	306086			Angle Shut Off For Gas Valve
014	33001735			Pipe And Bracket Assembly Series 18 Not Needed Use Vavle
015	211294	90767		Screw, 8A X 3/8 HeX Washer Head Tapping
016	33001810		Not Available	DUCT ASSY., INLET (GAS) NOTE: INLET DUCT ASSEMBLY
017	305169			Thermostat, Hi-Limit Gas
018	Y303377	338906		Radiant, Sensor
019	33001835			Cone Assembly, Combustion
020	Y303841			Cone, Extension
021	Y312890			Retainer, Heater Chamber
022	33001693			Cap, Gas Pipe
023	22001996	3370225		Screw

the laundry company®
the laundry company®
the laundry company®