Maytag MLG19PDAGW 11 - OUTER TUB

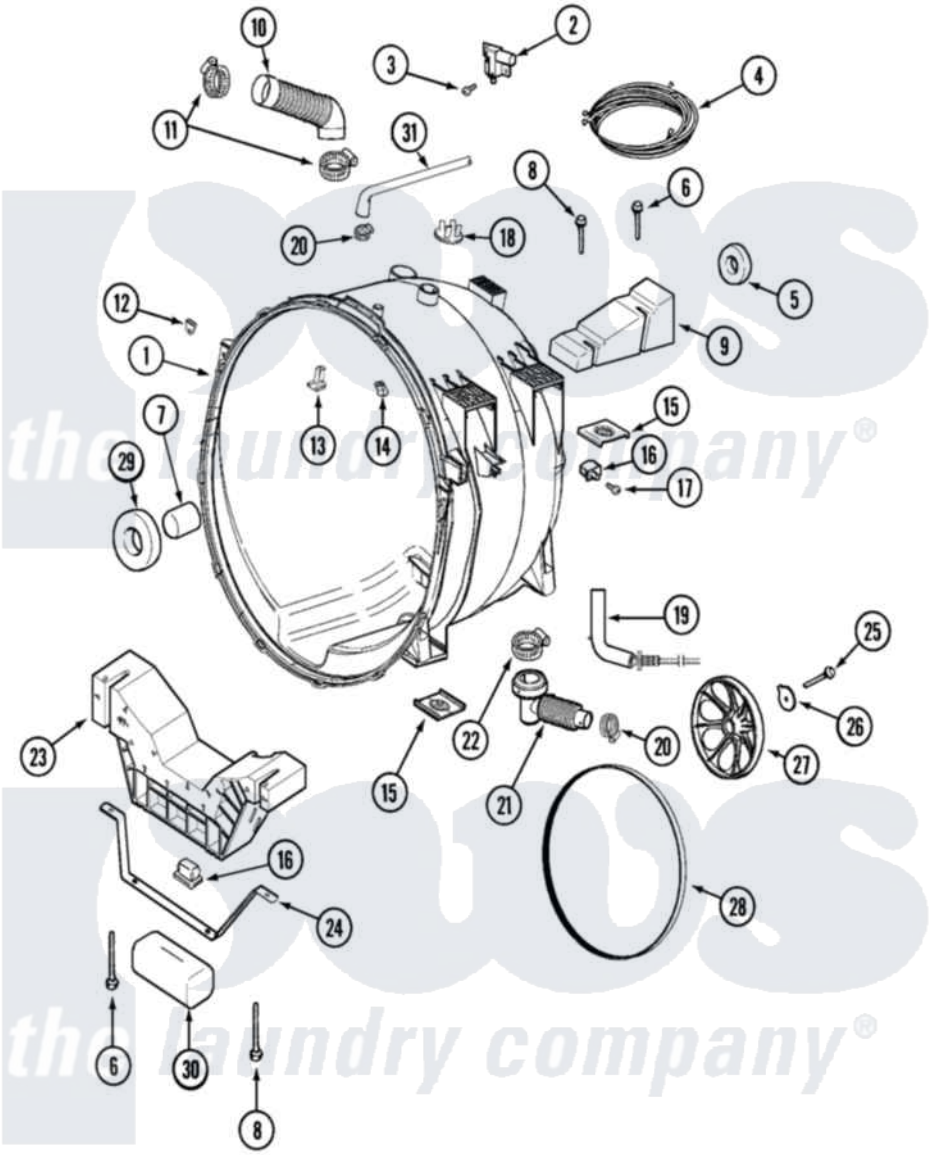

Maytag Residential Maytag MLG19PDAGW Dryer Parts Parts Diagram 11 - OUTER TUB
Click on the part number to view part

Item	Original Part Number	Replaced By	Status	Part Description
001	22002006			Clip, Unbalance Switch Harness
"	22002154	22004465		Outer Tub Assembly, As Pack
002	22002045	22003302		Switch, Internal Unbalance
"	22003302			Switch, Internal Unbalance
003	22002300	9740848		Screw, Mixing Valve Mounting
004	33002216	12001798		Kit-Harnes
005	22003441			Bearing, Rear
"	Y200720	22003441		Bearing, Rear
006	22003615			Bolt, Double Sems 5-3\8
007	22002935			Spacer, Bearing
008	22003616			Bolt, Double Sems 3-3\8
009	22002102			Weight, Counter Balance
010	22002083			Hose, Injector
011	22002052	616099		Clamp
012	22002103			Clip, U
013	22002004	22004310		Water Deflector

"	22002959	22004310		Water Deflector
014	22002006			Clip, Unbalance Switch Harness
"	22002061	910187		Screw
015	22002065			Nut, Counter Balance
016	22002044			Switch, Tub Displacement
"	22002044			Switch, Tub Displacement
017	22002061	910187		Screw
018	202515	596669		Clamp, Manifold
019	22002483			Hose, Air Dome
020	22001984	285655		Clamp, Hose
021	22002081	22003262		Hose, Tub To Pump Outlet
022	22002053	696392		Hose Clamp
023	22002006			Clip, Unbalance Switch Harness
"	22002302		Not Available	WEIGHT ASSEMBLY (FRT)
024	22002008			Strap
025	22002057	22003937		Screw, Retaining Bolt
026	22002055	22003936		Washer
"	22003936			Washer
027	22001998	22002315		Pulley, Spinner
028	12001435	12001788		Kit, Belt And Isolator--W
029	22002934			Bearing, Front
030	22002011		Not Available	CUSHION

the laundry company®