Maytag MLG19PRAWW 09 - DOOR SHROUD & DOOR LATCH ASSEMBLY (WASH)

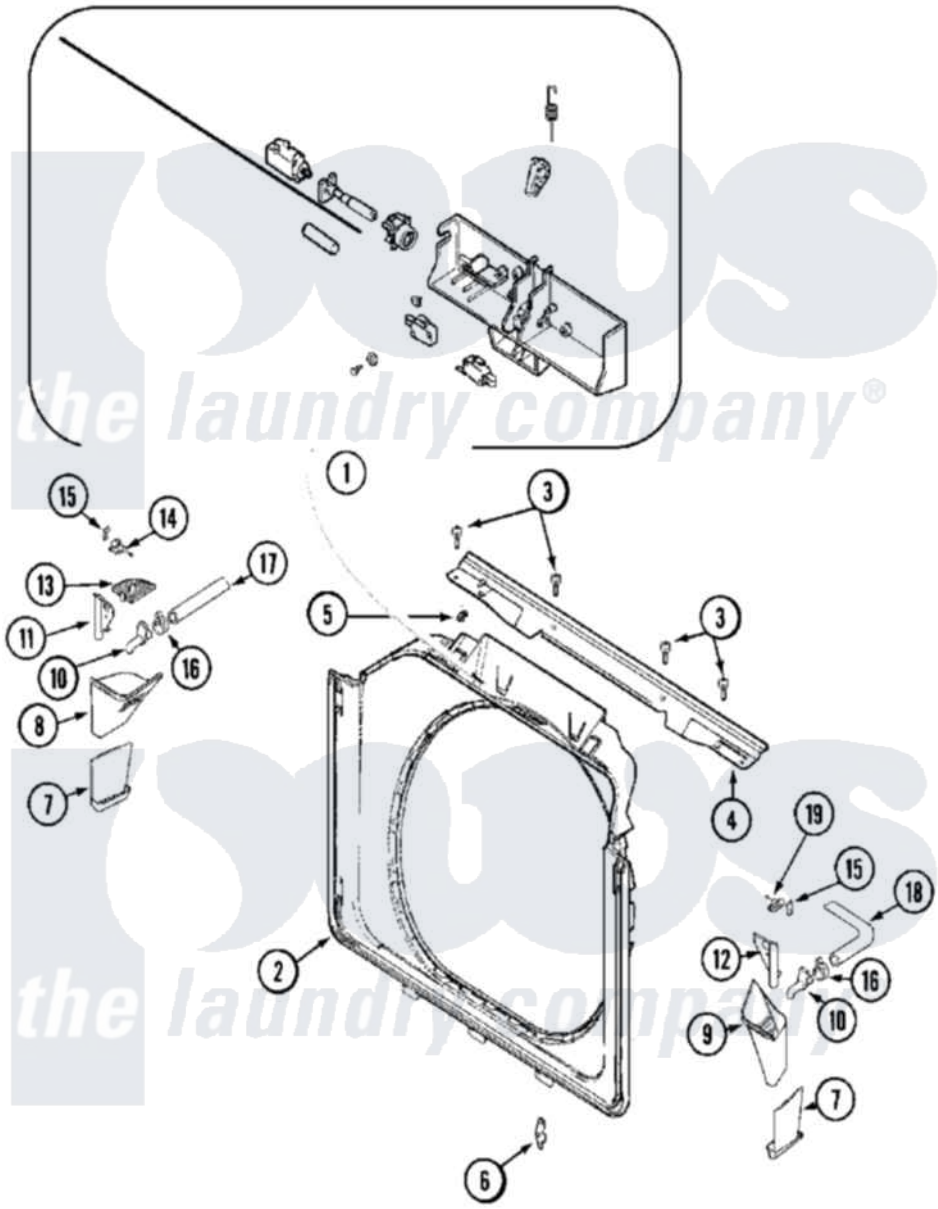

Maytag Residential Maytag MLG19PRAWW Dryer Parts Parts Diagram 09 - DOOR SHROUD & DOOR LATCH ASSEMBLY (WASH)
Click on the part number to view part

Item	Original Part Number	Replaced By	Status	Part Description
001	NLA		Not Available	LATCH, ASSY. (DOM/COMMERCIAL)
002	22002506			Shroud And Dispenser Hose
"	22003653			Retainer, Dispenser Hose
003	22001995			Screw Note: Screw, Tumbler Front And Shroud
004	22003908			Vapor Barrier
"	33002202	33002477		Support, Door Lock
"	33002203			Clip, Hose
005	22002014			Clip, Harness To Support
006	22002095	12001994		Cover
"	33001764			Cover, Hinge Hole
"	33001787			Screw, Hinge Note: Screw, Hinge Hole Cover
007	33002195			Grate, Overflow
"	33002196			Grate, Overflow

008	33002197			Cup, Bleach Dispenser
009	33002198			Cup, Fabric Softener Dispenser
010	33002199			Spout, Dispenser Fill
011	33002200			Cap, Bleach Dispenser
012	33002201			Cap, Fabric Softener
013	33002204			Screen, Bleach Cup
014	22002230	400021-1		Screw
"	33002205			Retainer, Bleach Cup
015	33002206			Fastener, J Type
016	205161	489503		Clamp
017	22003653			Retainer, Dispenser Hose
"	33002207			Hose, Bleach
018	33002208			Hose, Fabric Softener
019	22002230	400021-1		Screw
"	22003653			Retainer, Dispenser Hose
"	33002209			Retainer, Fabric Softener
020	22002484		Not Available	LABEL, BLEACH
"	22002485		Not Available	LABEL, FABRIC SOFTENER
"	22002486		Not Available	LABEL, LOADING INSTRUCTIONS
"	22002487		Not Available	LABEL, ADD DETERGENT

the laundry company®
the laundry company®