Maytag NGD5100TQ0 04 - BULKHEAD PARTS, OPTIONAL PARTS (NOT INCLUDED)

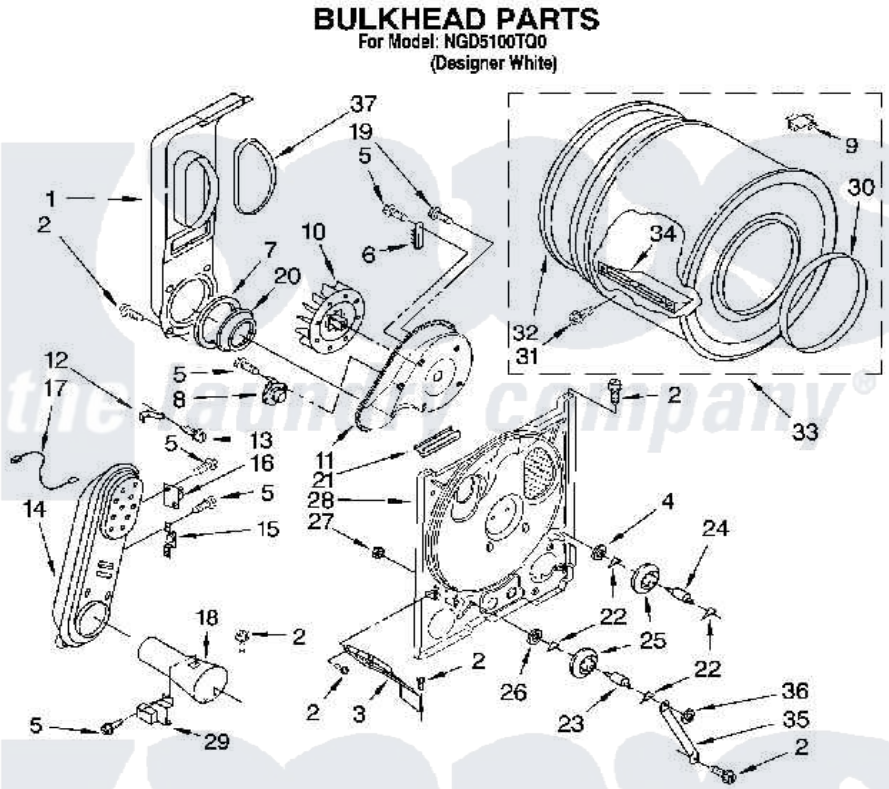

Maytag Residential Maytag NGD5100TQ0 Dryer Parts Parts Diagram 04 - BULKHEAD PARTS, OPTIONAL PARTS (NOT INCLUDED)
Click on the part number to view part

Item	Original Part Number	Replaced By	Status	Part Description
1	694283	279505		Chute
2	343641	681414		Screw, 10AB X 1/2
3	3406022			Bracket, Bulkhead
4	3388703			Washer, Support
5	90767			Screw, 8A X 3/8 HeX Washer Head Tapping
6	3392519			Thermal Limiter
7	347139			Seal, Lint Chute
8	3387134			Thermostat, Internal-Bias
9	8066086			Plug, Drum Hole
10	694089			Wheel, Blower
11	8577230			Housing, Blower
12	3398161			CLIP
13	489463			Screw, 8-18 X 1/16
14	8530285	279980		Box

15	3403140			Thermostat, High-Limit 205F
16	280010			Kit, Thermal Cut-Off
17	3401707			Jumper, Tco-High Limit
18	8066048			Funnel, Burner
19	3390647	488729		Screw
20	696302			Shield, Exhaust
21	3392247	686889		Pad
22	690997			Washer, Thrust
23	3399506	W10359270		Shaft, Drum Roller Threads
24	3399507	W10359269		Shaft, Drum Roller Threads
25	3397590	349241T		Support
26	348197			Washer, Support
27	3359452			Nut, Lock
28	8529955	279793		Bulkhead
29	338906			Radiant, Sensor
30	3394509			Ring, Bearing
31	W10109200			Screw, Baffle Mounting
32	8066085	239087		Seal
33	3396777	697760		Drum
34	342847			Baffle, Drum
35	3976435			Bracket, Support
36	90296			Nut, Push On
37	339956			Seal, Air Duct To Bulkhead
	BLANK		Not Available	ACCESSORY PARTS
"	279948	4392065		Kit, Dryer Repair
"	8522199			Accessory Parts
"	346764			Kit, Hold Down
"	689790			Dry Rack
"	72017			Paint, Touch-Up
"	BLANK		Not Available	PAINT, PRESSURIZED SPRAY (12 oz.)
"	350930			Paint, Pressurized Spray B
"	350938			Paint, Pressurized Spray B
"	799344			Paint, Touch-Up)

the laundry company®