Maytag YMED6600TQ0 01 - TOP AND CONSOLE PARTS

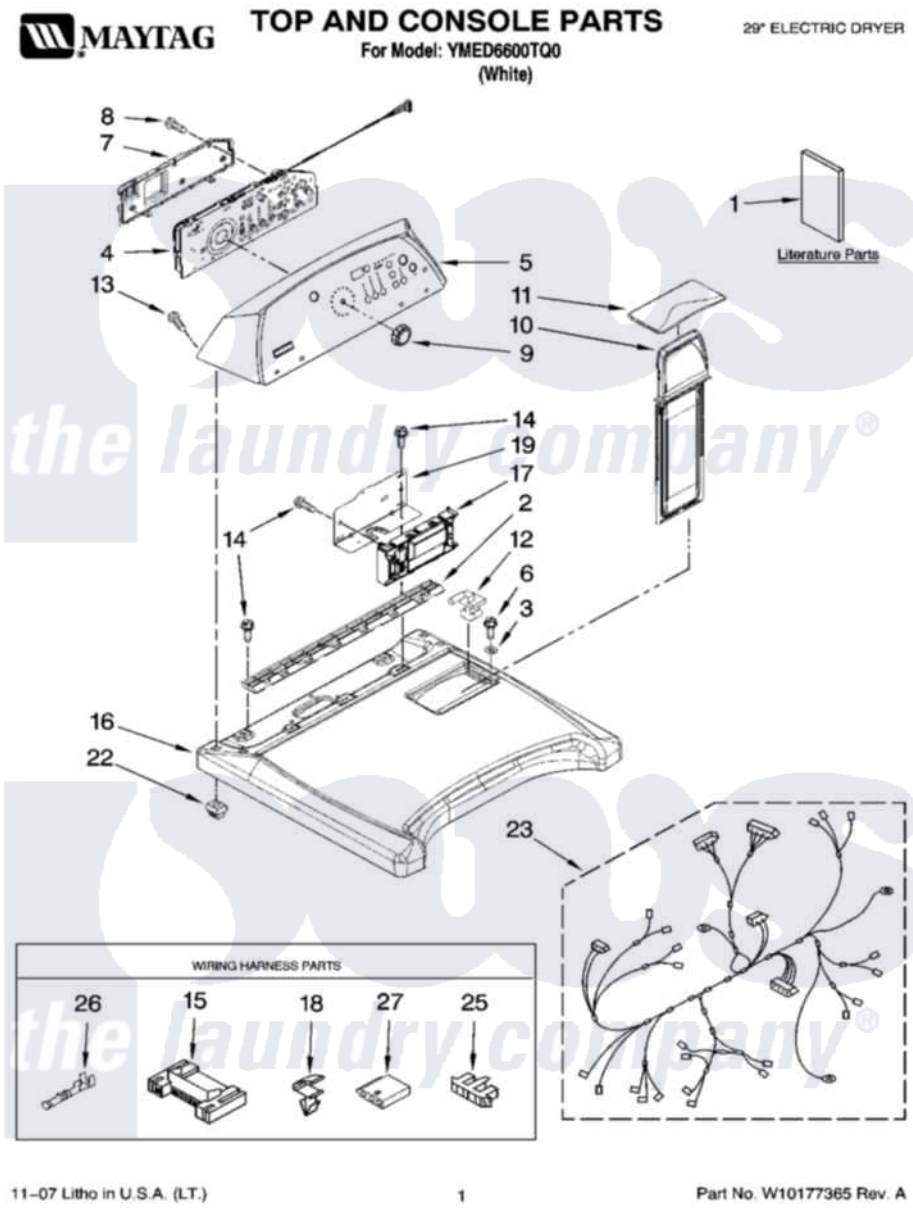

Maytag Residential Maytag YMED6600TQ0 Dryer Parts Parts Diagram 01 - TOP AND CONSOLE PARTS
Click on the part number to view part

Item	Original Part Number	Replaced By	Status	Part Description
1	W10156042		Not Available	Tech Sheet
"	W10160249		Not Available	Guide, Quick Start
"	W10160250		Not Available	Use & Care Guide
"	W10166000		Not Available	Tip Sheet
"	W10165147		Not Available	Sheet, Steam Tip
"	W10134980		Not Available	Installation, Diagonostic Guide
2	8558863			Bracket, Console
3	237446	487596		Washer
4	W10051167			Assembly, User Interface
5	W10170903			Panel, Console
6	3196537	3196557		Panel, Manifold
7	8564265			Cover, Rear- User Interface
8	W10003770			Screw, 6-19 X 1/2
9	W10110196			Knob, Assembly
10	8572270			Assembly, Lint Screen
11	W10044320	W10168227		Cover, Lint Screen

12	W10044470			Hinge, RH
"	W10044480			Hinge, L.H.
13	W10001580			Screw, 10-16 X 5/16
14	337686		Not Available	SCREW, 8-18 X .500
15	3395683			Receptacle, Multi-Terminal
16	8565025			Top
17	W10111614	W10111616		Control, Electronic
18	3394427			Clip-Harness
19	8563853			Bracket, Machine Controller
22	8558853			Screw, Grommet
23	W10111007		Not Available	Harness Wiring
25	3936144			Do-It-Yourself Repair Manuals
26	94614			Terminal
27	3397269			Connector, Timer

the laundry company®
the laundry company®
the laundry company®