Maytag YMEDB850WQ1 03 - BULKHEAD PARTS

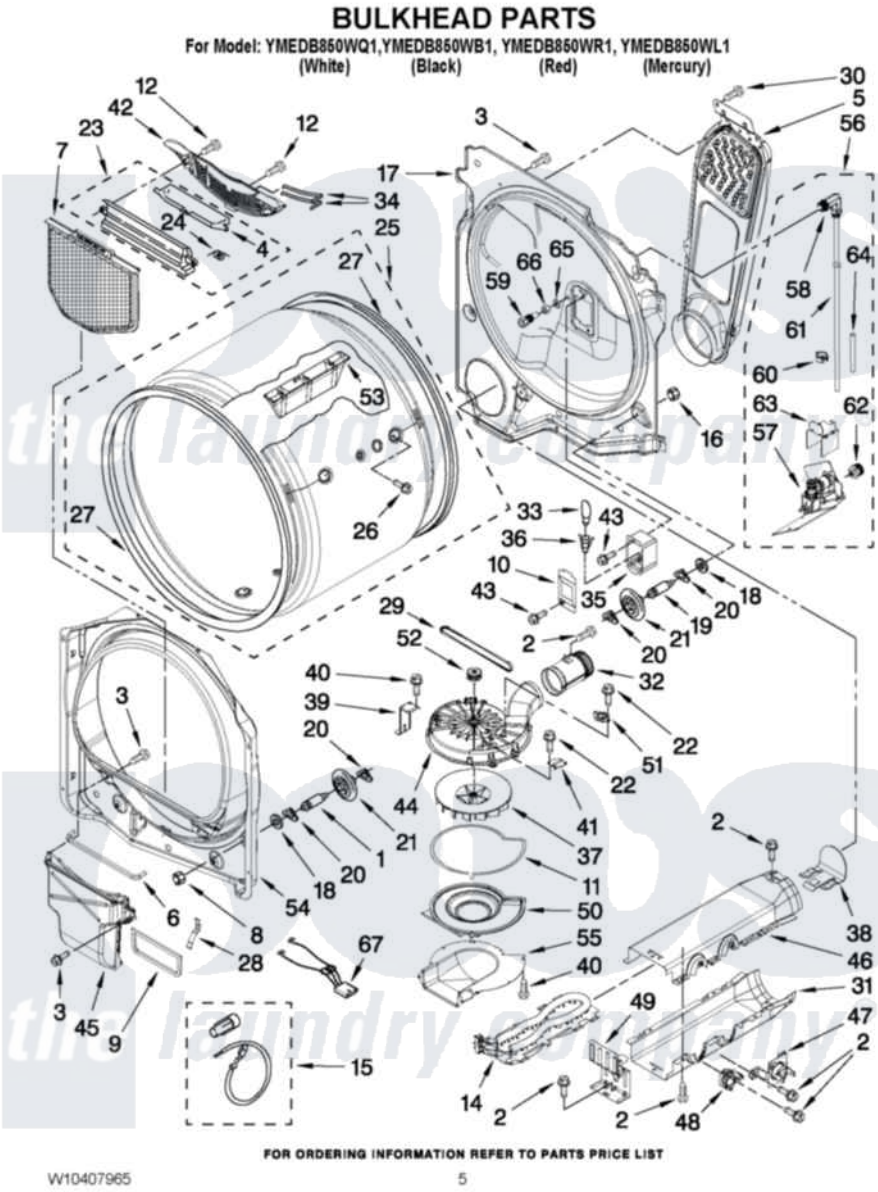

Maytag Residential Maytag YMEDB850WQ1 Dryer Parts Parts Diagram 03 - BULKHEAD PARTS
Click on the part number to view part

Item	Original Part Number	Replaced By	Status	Part Description
1	W10359271			Shaft, Drum Roller Threads
2	90767			Screw, 8A X 3/8 HeX Washer Head Tapping
3	3390631			Screw, 10-16 X 3/8
4	3394984	8563758		Door, Lint Screen
5	8544730			Air Duct Assembly
6	697813			Seal, Outlet Housing
7	W10049370	W10120998		Screen
8	3934666	W10080210		Nut, 3/8 X 16
9	8544721			Seal, Lint Duct
10	3402841	8532165		Lens, Drum Light
11	8573068			Seal, Blower Cover
12	3387230			Screw, 10-16 X 13/16
14	W10044440		Not Available	HEATER ELEMENT
15	279457			Wire Kit, Terminal
16	W10001120	W10080190		Nut, 3/8-16
17	W10139797			Bulkhead, Rear

18	3387459	W10080960		Washer, Support
19	W10359272			Shaft, Roller Drum Threads
20	690997			Washer, Thrust
21	W10314171			Roller, Support Assembly
22	3350424			Screw, 10-16 X 1/2
23	3394985	8563755		Housing, Outlet Assembly
24	3394986			Spring, Lint Screen Door
25	8557269	8557271		Drum
26	W10219342			Screw, Baffle Mounting
27	W10116344	280140		Seal
28	8573070			Clip, Lint Duct
29	8544742			Belt, Blower
30	693995			Screw, Hex Head
31	8544770			Housing Slot, Heater Box
32	8544755			Exhaust Pipe
33	3406124	22002263		Lamp
34	3387223			Electrode, Sensor
35	3977373			Bracket, Drum Light
36	W10214261			Socket, Drum Light Assembly
37	8544737			Wheel, Blower
38	8544776			Flange, Heater Box
39	8544741			Screw, 11-16 X 3/4 Lint Screen
40	97787	W10109200		Screw, Baffle Mounting
41	3390719			Thermal-Fuse
42	8544723			Grille Outlet
43	3390647	488729		Screw
44	W10256512			Housing, Blower
45	8544786			Lint Duct Assembly
46	8544769			Housing, Blower Lint Duct Assembly
47	8318314	279973		Kit, Thermal Cut-Off
48	8557403			Thermostat 295 F
49	8544729			Bracket, Heater Box
50	8544719			Cover, Blower
51	8577274			Thermostat 295F
52	8544739			Pulley, Blower
53	8563860			Baffle, Drum
54	8557244			Bulkhead, Front
55	8544718			Duct, Inlet Blower
56	W10130506			Valve And Nozzle Assembly
57	W10129424			Valve And Bracket Assembly
58	W10348593	W10410316		Nozzle And Hose Assembly
59	W10277503			Nozzle And Hose Assembly
60	W10044599			Clip, Push-To-Connect
61	W10347743		Not Available	HOSE, NYLON (NOT SERVICABLE INCLUDED WITH ITEM. 58)
62	W10044605			Coupling, Hose
63	W10160575			Cover, Myst Valve
64	W10435653			Sleeve, Tube
65	W10044579			Washer, Nozzle Blower Housing
66	W10044628			Brass, Nut 9/16 - 24 X 1/32

the laundry company®

67	3406653	Harness, Sensor

the laundry company®

the laundry company®

the laundry company®