Norge LWN202A 02 - CONTROL PANEL

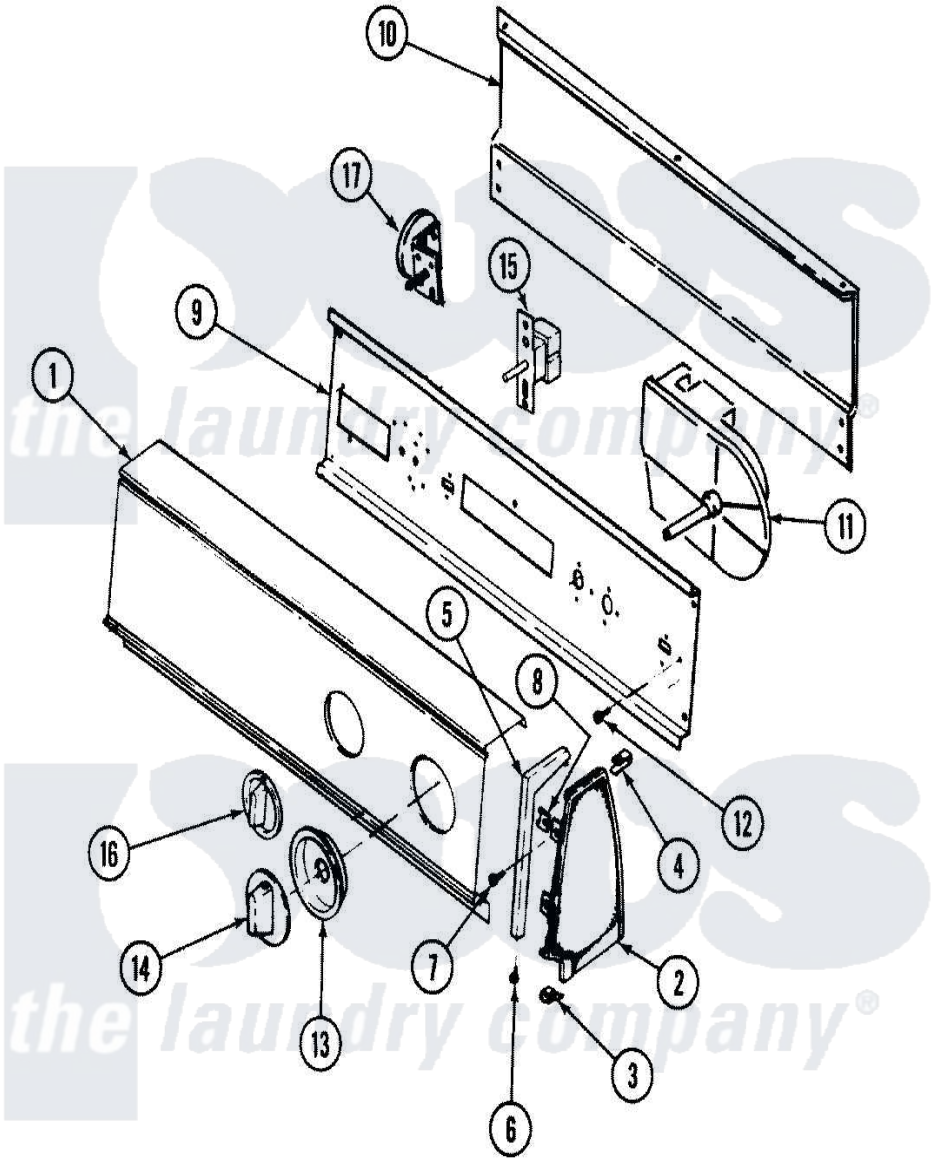

Norge Residential Norge LWN202A Washer Parts Parts Diagram 02 - CONTROL PANEL
Click on the part number to view part

Item	Original Part Number	Replaced By	Status	Part Description
1	25-7793			Screw
"	21001057		Not Available	PANEL, CONTROL
"	25-7702			Speedclip, End Cap To Control Panel
2	35-2487	21001451		Cap- End
"	35-2488	21001452		Cap- End
3	25-7697	25-2219		Screw
"	25-7851			Speedclip, End Cap To Top
4	25-7435	33002917		Screw, No.10-16
"	25-7852			Speedclip, Rr Shld To End Cap
5	53-0277		Not Available	TRIM, END CAP (RT)
"	53-0278		Not Available	TRIM, END CAP (LT)
6	25-7760			Screw
7	25-3092	90767		Screw, 8A X 3/8 HeX Washer Head Tapping
8	25-7702			Speedclip, End Cap To Control Panel

9	53-1676			Shield, Control
"	31001128		Not Available	SHIELD, CONTROL
"	53-2504	31001193		Pad, Shield
10	25-3092	90767		Screw, 8A X 3/8 HeX Washer Head Tapping
"	35-2688	21001460		Shield, Rear
"	25-7853	25-7933		Ring, Retaining
"	25-3457			Screw, Sems
11	35-3840			Timer
12	25-0205	216412		Screw, Bracket To Timer
13	35-3964	21001497		Skirt Ri
14	35-2485	12500058		Knob Ski
15	25-3092	90767		Screw, 8A X 3/8 HeX Washer Head Tapping
"	21001139			Switch, Water Temp. 3 Position
"	35-0124		Not Available	SWITCH, WATER TEMPERATURE
16	35-4244	21001283		Knob, Selector----Piq
17	35-3691	21001554		Switch, Water Level
"	25-3092	90767		Screw, 8A X 3/8 HeX Washer Head Tapping
18	21001034		Not Available	MANUAL, USE & CARE
"	21001033		Not Available	MANUAL, USE & CARE
19	16002081		Not Available	GUIDE, QUICK REF - NORGE

the laundry company®