Samsung DV316LES 01 - BLOWER/HEATER/MOTOR

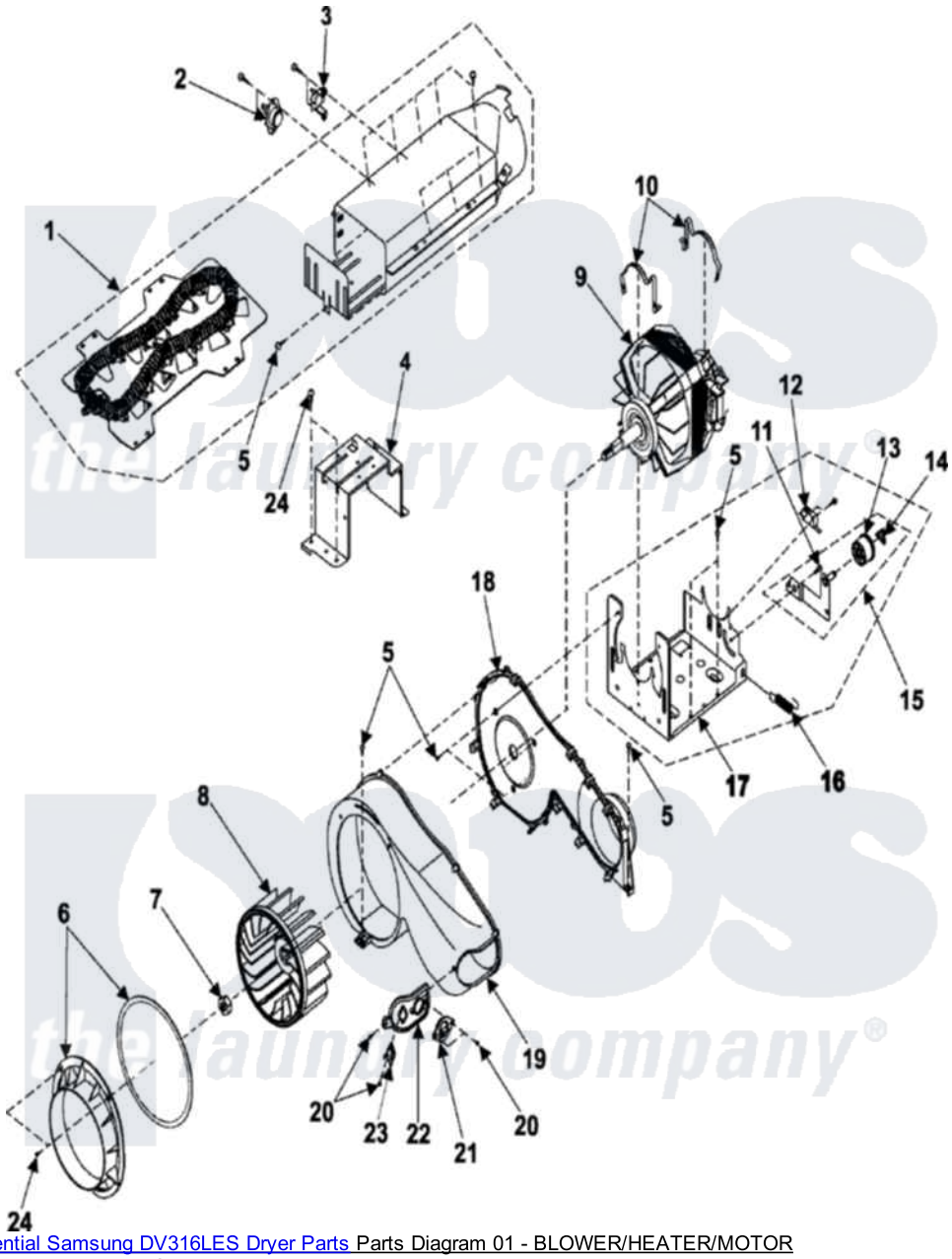

Samsung Residential Samsung DV316LES Dryer Parts Parts Diagram 01 - BLOWER/HEATER/MOTOR
Click on the part number to view part

Item	Original Part Number	Replaced By	Status	Part Description
1	DC97-08891A	35001119		Assembly, Heater Box
2	DC47-00018A	35001092		Thermostat
3	DC96-00887A	35001193		Assembly-Bracket Thermostat
4	DC61-01224A	35001104		Bracket, Heater-Box
5	6002-000231		Not Available	Screw-Tapping (5)
6	DC97-07895A	35001090		Assembly-Duct Connector
7	6021-001201	35001079		Nut-Inch
8	DC67-00180A	35001220		Wheel- Blower
9	DC31-00055A	35001080		Assembly, Motor 60 Hz
10	DC61-01214A	35001081		Clamp, Motor
11	6009-001342		Not Available	SCREW-SPECIAL;TH,+,M5,L11,ZPC
12	3405-001077	35001082		Switch, Broken Belt
13	DC66-00401A		Not Available	SHAFT-IDLER
"	DC97-07509B	35001086		Pulley Assembly
"	DC66-00402A		Not Available	ROLLER-IDLER
14	DC61-01228A	35001084		Holder-Shaft

15	DC96-00882B	12002777		Bracket-ID
16	DC61-01215A	12002777		Bracket-ID
17	DC61-01213A	35001106		Bracket-Motor
18	DC61-01241A	35001088		Blower-Housing Rear
19	DC63-00536A		Not Available	COVER-DUCT FAN
20	6002-000470		Not Available	Screw-Tapping (4)
21	DC32-00007A	35001191		Thermistor
22	DC61-01240A	35001105		Bracket-Thermistor
23	DC47-00016A	35001087		Thermostat

the laundry company®
the laundry company®
the laundry company®