Whirlpool 1CLSR7010PQ1 02 - CONTROLS AND REAR PANEL PARTS

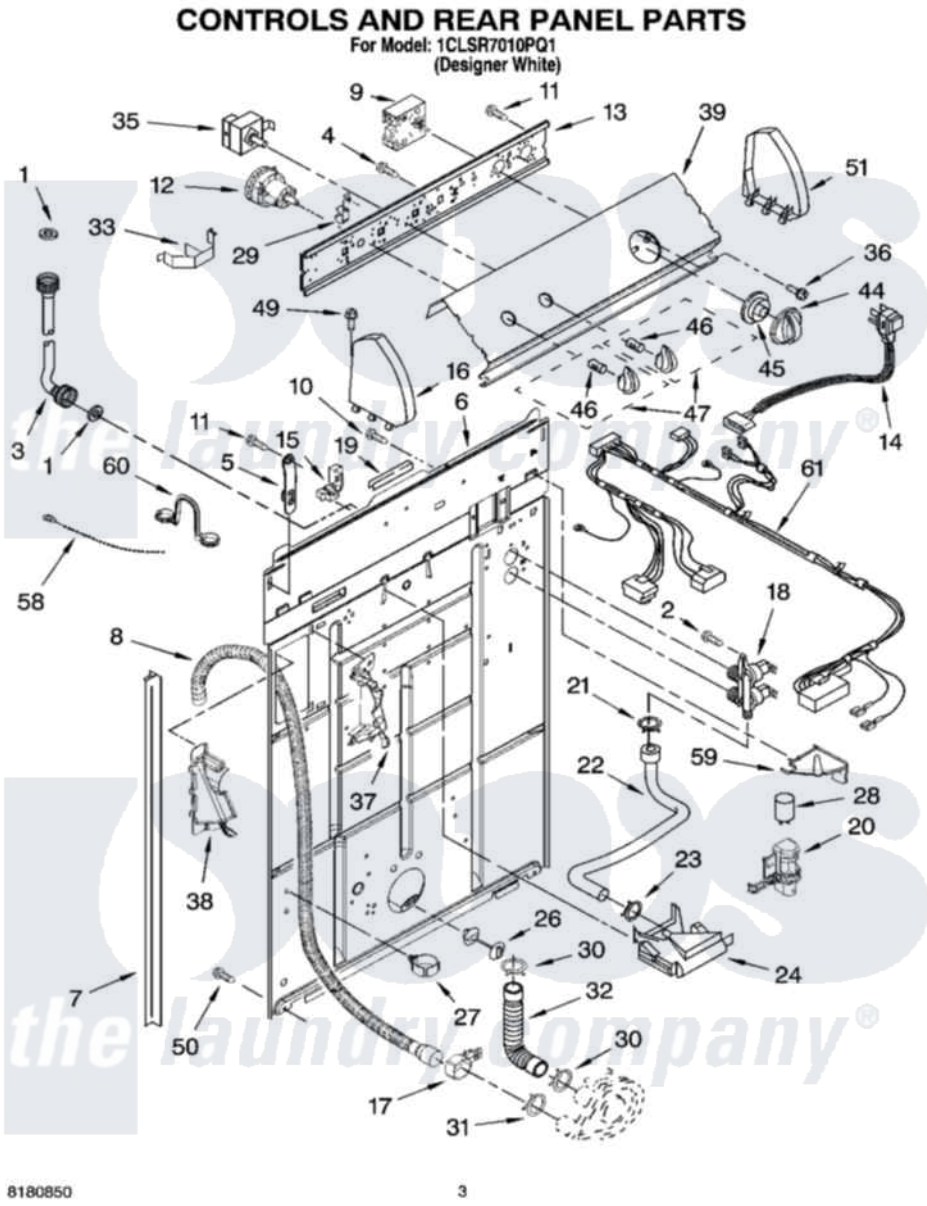

Whirlpool Residential Whirlpool 1CLSR7010PQ1 Washer Parts Parts Diagram 02 - CONTROLS AND REAR PANEL PARTS

Click on the part number to view part

Item	Original Part Number	Replaced By	Status	Part Description
1	3976300	16123		Washer Inlet-Hose Miscellaneous Parts Must be Ordered Separately.
2	9740848			Screw, Mixing Valve Mounting
3	8571377	89503		Hose-Inlet
"	8571378	89503		Hose-Inlet
4	3400073			Screw, Ground
5	8568314			Strap, Console
6	8318015			Panel, Rear
7	62747			Pad, Rear Panel
8	8559373	W10096921		Drain Hose Assembly
9	8546685			Timer, Control
10	3351614			Screw, Gearcase Cover Mounting
11	90767			Screw, 8A X 3/8 HeX Washer Head Tapping
12	3366847	W10337780		Switch-WL

13	3948608			Bracket, Control
14	661661	285800		Cord-Power
15	3952821	285777		Relief-Str
16	8271365	279962		Endcap
17	8541668			Clamp, Hose
18	3952164	285805		Valve-Inlet
19	303294	3367669		Protector, Edge
20	8318046			Clip, Capacitor
21	301958	596669		Clamp, Manifold
22	8541607	3357328		Hose, Vacuum Break
23	370450	596669		Clamp, Manifold
24	387606	3360977		Break-Vac
26	8519200			Support, Rear Panel
27	8541667			Clamp, Hose
28	8572717			Capacitor, Motor Start
29	8317975			Restraint, Harness
30	3363366	616099		Clamp
31	8317496	285655		Clamp, Hose
32	3951449	285871		Hose
33	8055003			Clip, Harness And Pressure Switch
35	661612	W10168256		Switch, Water Temperature
36	3400818			Screw, Timer Mounting
37	8541669			Bucket, Drain Hose
"	BLANK		Not Available	(Left Half)
38	8541658			Bucket, Drain Hose
"	BLANK		Not Available	(Right Half)
39	3956552			Panel, Console
44	8544943			Knob, Timer
45	8544947			Dial, Timer
46	8536939			Clip, Knob
47	8544935			Knob, Control
49	388326			Screw, 8-18 X 1.25
50	62863	3390631		Screw, 10-16 X 3/8
51	8271359	279962		Endcap
58	3347868	W10339879		Tie, Cable
59	8539874			Shield, Suds
60	8541672	8577378		U-Bend, Drain Hose
61	3957014			Harness, Wiring
"	N/A		Not Available	FOLLOWING PARTS NOT ILLUSTRATED
"	3957361			Miscellaneous Parts Bag

the laundry company®