Whirlpool 3SLSR6233MQ0 03 - AGITATOR, BASKET AND TUB PARTS

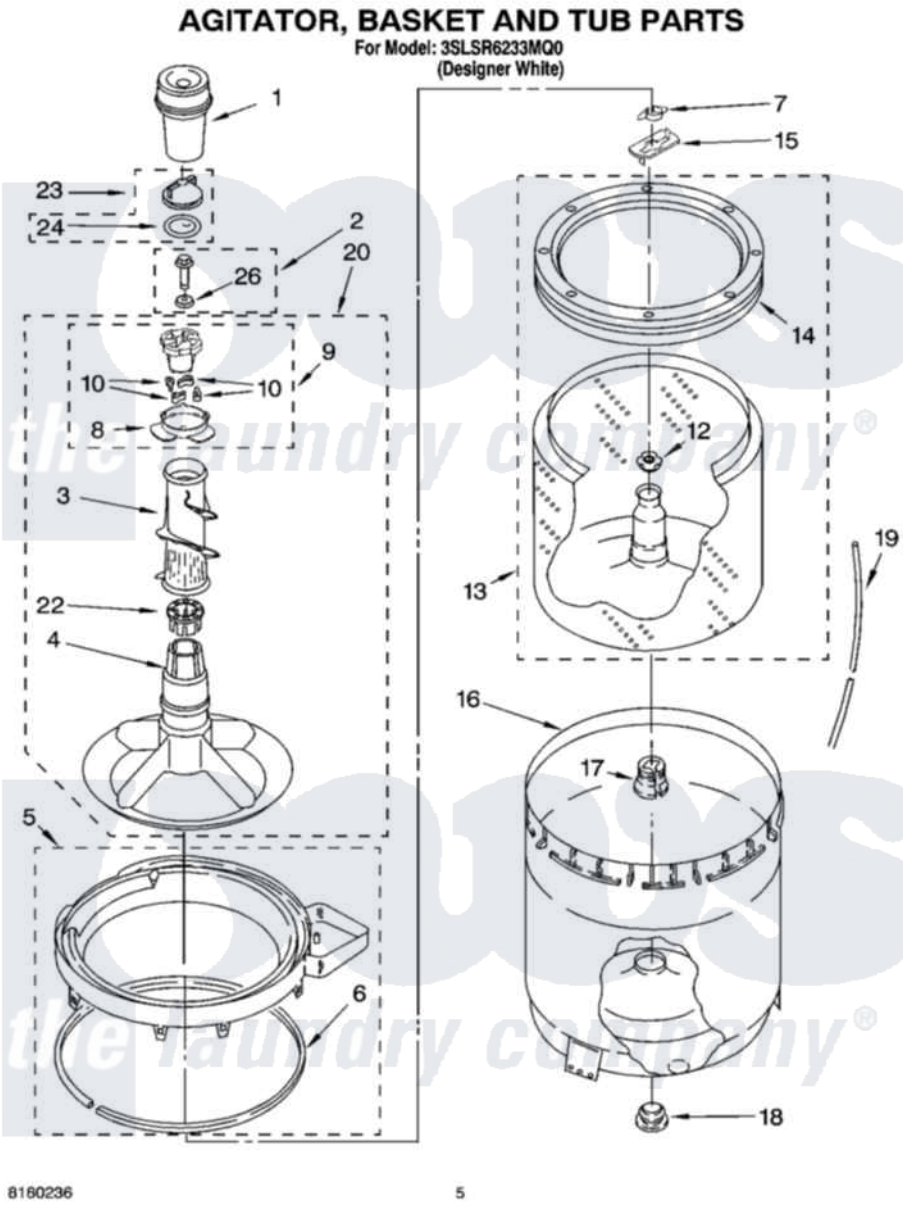

Whirlpool Residential Whirlpool 3SLSR6233MQ0 Washer Parts Parts Diagram 03 - AGITATOR, BASKET AND TUB PARTS
Click on the part number to view part

Item	Original Part Number	Replaced By	Status	Part Description
1	63580			Dispenser, Fabric Softener
2	358237			Screw And Washer
3	3363003			Mover, Clothes
4	3347288			Agitator
5	8528150	W10445870		Ring-Tub
6	3976308			Gasket, Tub Ring
7	3354845			Clip, Agitator
8	3363661			Bearing, Driven Cam
9	3363663	285811		Cam-Agitator
10	3366877	80040		Dog-Agitator
12	21366			Nut, Spanner
13	8526016	W10389328		Clothes Container, Assembly
14	8519788	387240		Ring, Balance
15	3355921	8543666		Washer, Agitator
16	63849			Strain Relief, Power Cord
17	389140			Tub Block, Basket Drive

18	383727		Gasket, Centerpodt
19	3347780	353244	Hose, Pressure Switch
20	3946501		Agitator, Assembly
22	3350389	285587	Washer
23	3354733	W10074580	Cap, Barrier
24	3348855	W10072840	Fabric Softener
26	3949550		Washer

the laundry company®
the laundry company®
the laundry company®