Whirlpool 7MGGQ9800PL1 04 - 8576353 BURNER ASSEMBLY, OPTIONAL PARTS (NOT INCLUDED)

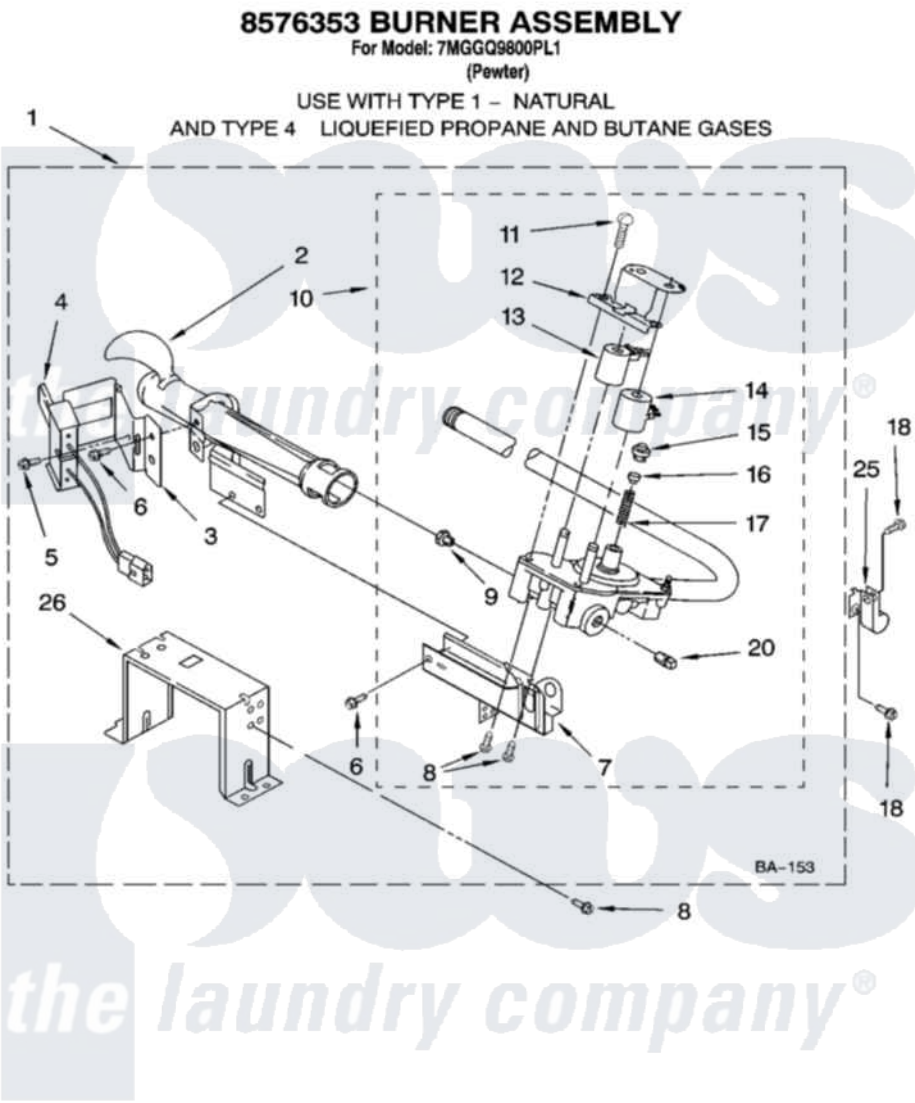

8180713 7

Whirlpool Residential Whirlpool 7MGGQ9800PL1 Dryer Parts Parts Diagram 04 - 8576353 BURNER ASSEMBLY, OPTIONAL PARTS (NOT INCLUDED)
Click on the part number to view part

Item	Original Part Number	Replaced By	Status	Part Description
1	8576353	280119		Burner-Gas
2	688617	693140		Burner
3	694298			Bracket, Ignitor
4	686590	279311		Ignitor
5	3393909			Screw, 8-32 X 7/8
6	343641	681414		Screw, 10AB X 1/2
7	3389871		Not Available	Base, Burner
8	3387057			Screw, 10-16 X 1/2 Orifice, Burner
9	15418			Orifice, Burner Type 1
"	15422		Not Available	ORIFICE, BURNER (TYPE 4) (BUTANE)
"	234867	229742		Orifice, Burner
10	8281914	279923		NAT Gas
11	694421			Screw, Bracket Mounting

12	694538			Bracket, Shunt
13	694540			Coil, 60 Hz
14	694539			Coil, 60 Hz
15	694424			Leak, Limiter
16	694423			Screw, Regulator Adjustment
17	694422			Spring, Regulator
18	3390647	488729		Screw
20	239822	W10295523		Plug, Pipe
25	3387561			Clamp-Pipe
26	3389889			Bracket, Support
"	N/A		Not Available	FOLLOWING PARTS NOT ILLUSTRATED
"	8576846	W10317689		Conversion Kit L.P.G. To Type Nat.
	N/A		Not Available	ACCESSORY PARTS
"	4392067			Kit, Dryer Repair
"	346764			Kit, Hold Down
"	8522199			Accessory Parts
"	4396174			Paint, Touch-Up
"	4396175			Paint, Pressurized Spray
"	350938			Paint, Pressurized Spray B

the laundry company®
the laundry company®