Whirlpool 7MGHW9400PW2 04 - DISPENSER PARTS

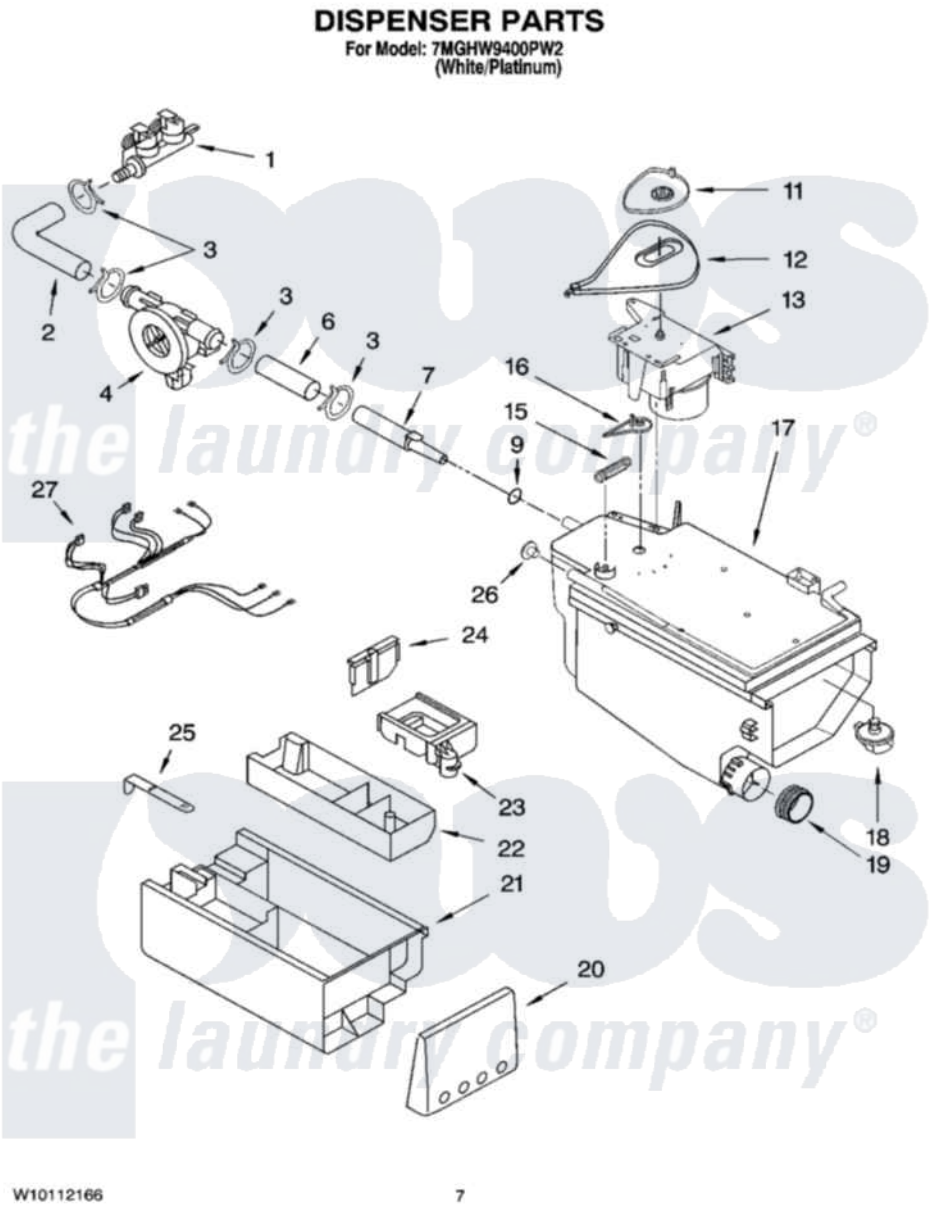

Whirlpool Residential Whirlpool 7MGHW9400PW2 Washer Parts Parts Diagram 04 - DISPENSER PARTS
Click on the part number to view part

Item	Original Part Number	Replaced By	Status	Part Description
1	8182862			Valve, Inlet
2	8181710			Hose, Inlet Valve To Vent Pipe
3	8181751	489503		Clamp
4	8181696	W10110225		Flowmeter
6	8181708			Hose, Flowmeter
7	8183010	280194		Nozzle
9	8183036	280196		Ring-O
11	8181726			Cam, Actuator
12	8181725			Lever, Water Distribution
13	8181723			Actuator
15	8181727			Spring, Lever
16	8181724			Connection, Lever
17	8183032	280198		Dispenser
18	8181712			Nozzle, Distribution
19	8181747			Seal
20	8181854			Handle, Drawer

21	8181720	Drawer, Detergent
22	8181722	Container, Detergent
23	8182665	Siphon, Bleach/Softener
24	8181730	Separator
25	8181721	Hook, Drawer
26	8182123	Led, Pcb
27	8183022	Harness, Wiring

the laundry company®
the laundry company®
the laundry company®