Whirlpool 7MLBR6103PQ1 01 - TOP AND CABINET PARTS

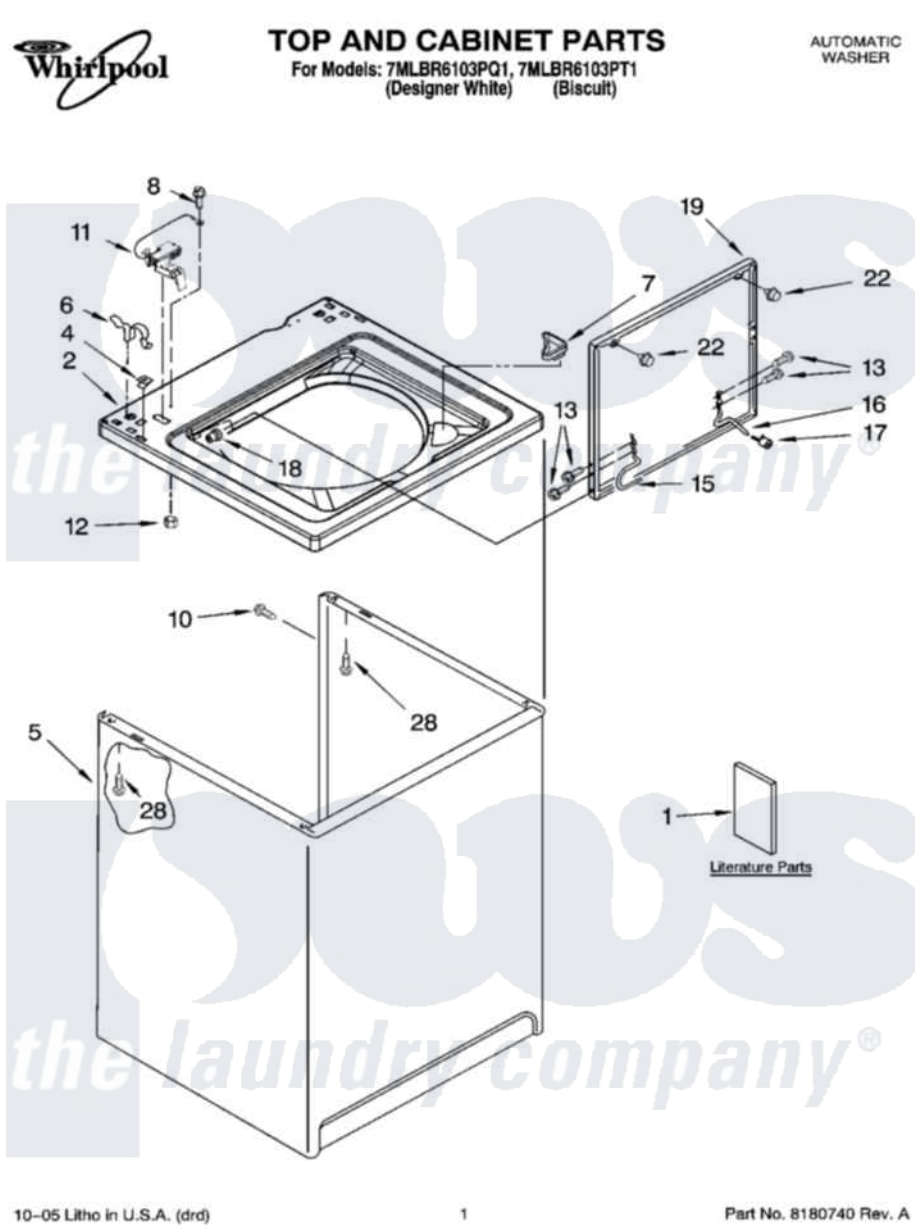

Whirlpool Residential Whirlpool 7MLBR6103PQ1 Washer Parts Parts Diagram 01 - TOP AND CABINET PARTS
Click on the part number to view part

Item	Original Part Number	Replaced By	Status	Part Description
1	8316474		Not Available	Installation Instructions
"	8558600		Not Available	Feature Sheet
"	8539806		Not Available	Use & Care Guide
"	8558594		Not Available	Energy Guide
"	8542379		Not Available	Wiring Diagram
2	8541617			Top
"	8541619			Top
4	357213			Nut, Push-In
5	63128			Cabinet
"	3954777			Cabinet
6	62780			Clip, Top And Cabinet And Rear Panel
7	3362952			Dispenser, Bleach
8	3351614			Screw, Gearcase Cover Mounting
10	3357011	308685		Side Trim)
11	8318084			Switch, Lid

12	8533959	680762	Nut
13	3351355	W10119828	Screw, Lid Hinge Mounting
15	8318088		Hinge, Lid
16	54583		Hinge, Lid
17	19119		Bumper, Lid Hinge
18	21258		Bearing, Lid Hinge
19	8557509	3957615	Lid
"	8557510	3957616	Lid
22	9724509		Bumper, Lid
28	3390631		Screw, 10-16 X 3/8

the laundry company®
the laundry company®
the laundry company®