Whirlpool 7MLGQ8857JQ5 02 - CABINET PARTS

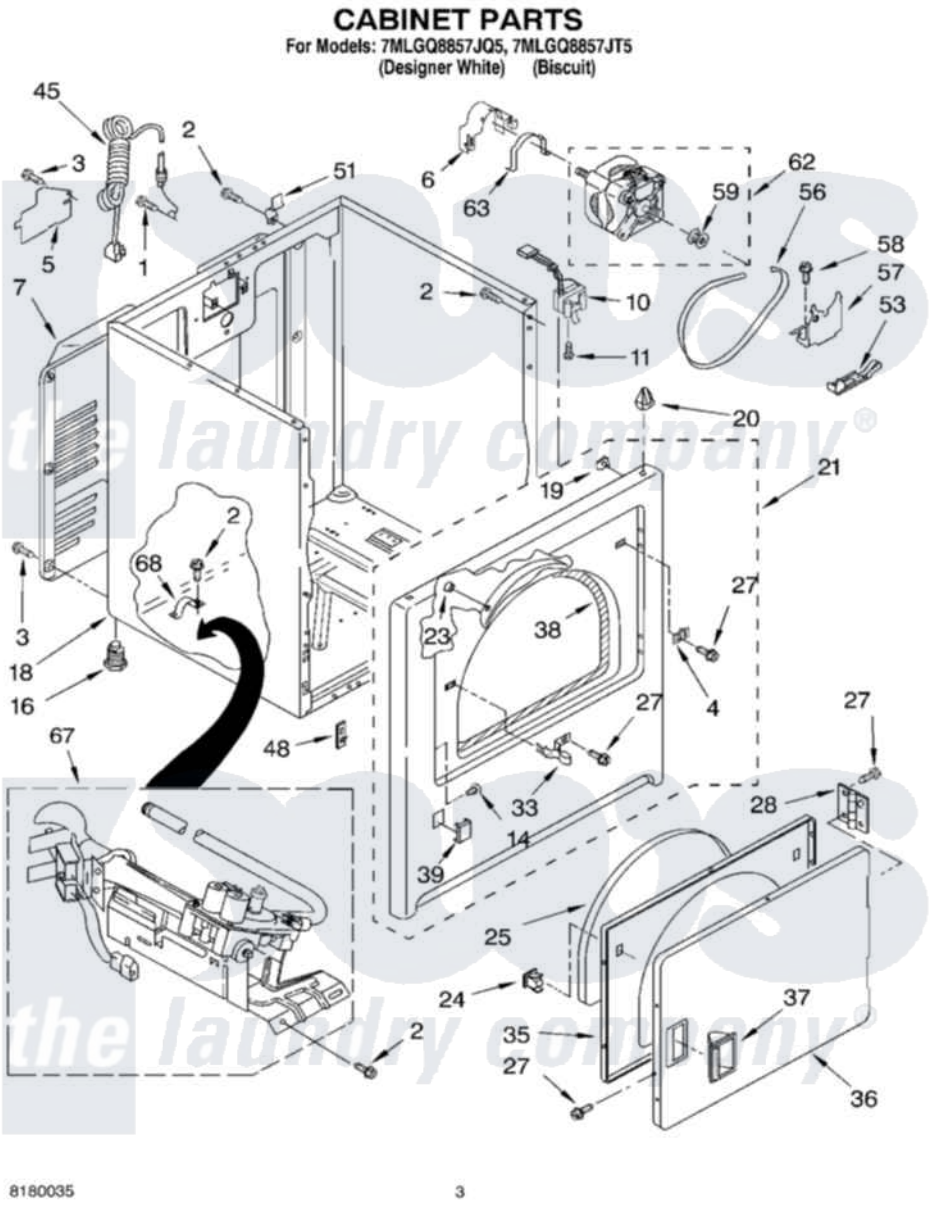

Whirlpool Residential Whirlpool 7MLGQ8857JQ5 Dryer Parts Parts Diagram 02 - CABINET PARTS
Click on the part number to view part

Item	Original Part Number	Replaced By	Status	Part Description
1	697776	4331106		Screw, No.10-32 X 7/16
2	343641	681414		Screw, 10AB X 1/2
3	693995			Screw, Hex Head
4	3403630			Plug, Strike Hole
"	3403632			Plug, Strike Hole
5	3396795			Cover, Terminal Block
6	3404162			Clamp, Motor
7	3396805	280043		Panel-Rear
10	3406107			Door Switch Assembly
11	697773	3395530		Screw
14	3404413			Plug, Hinge Hole
"	3404415			Plug, Hinge Hole
16	3392100	49621		Feet-Leveling
"	279810			Foot-Optional
18	8530603	8533643		Cabinet
"	8530606	3977306		Cabinet

19	98234		Clip, U-Bend
20	690363	18776	Lock, Front Top
21	3403447	279854	Panel
"	8282482	280020	Panel
23	685203	279220	Clip
24	690081	279570	Latch
25	3405246		Seal, Door Push-To-Start
27	342055	488627	Screw
28	3405514	W10362431	Hinge And Pin Assembly
33	3403431		Strike, Panel
35	3402341		Door, Inner
36	3402335		Door, Front
"	3402337		Door, Front
37	3405184		Handle, Door
"	3405189		Handle, Door
38	3406129		Seal And Bearing Assembly
39	3394975		Plug, Front Panel
"	3394978		Plug, Front Panel
45	344020	3401402	Cord, Power
48	3394083		Clip, Front Panel
51	238088	8066217	Hinge, Top
53	3394332	691366	Idler And Pulley Assembly
56	8066065	341241	Belt
57	348780		Base, Motor
58	3400500		Bolt, 3405245 5/16-18 X 3/4
59	3394341	W10299847	Pulley-Motor
62	8538262	279827	Motor-Drve
63	660658		Clamp, Motor Mounting 343481 685441
67	8318272	W10465748	Burner-Gas
68	341029		Clamp, Pipe Door Spring

the laundry company®