Whirlpool 7MWTW1955YW1 01 - TOP AND CABINET PARTS

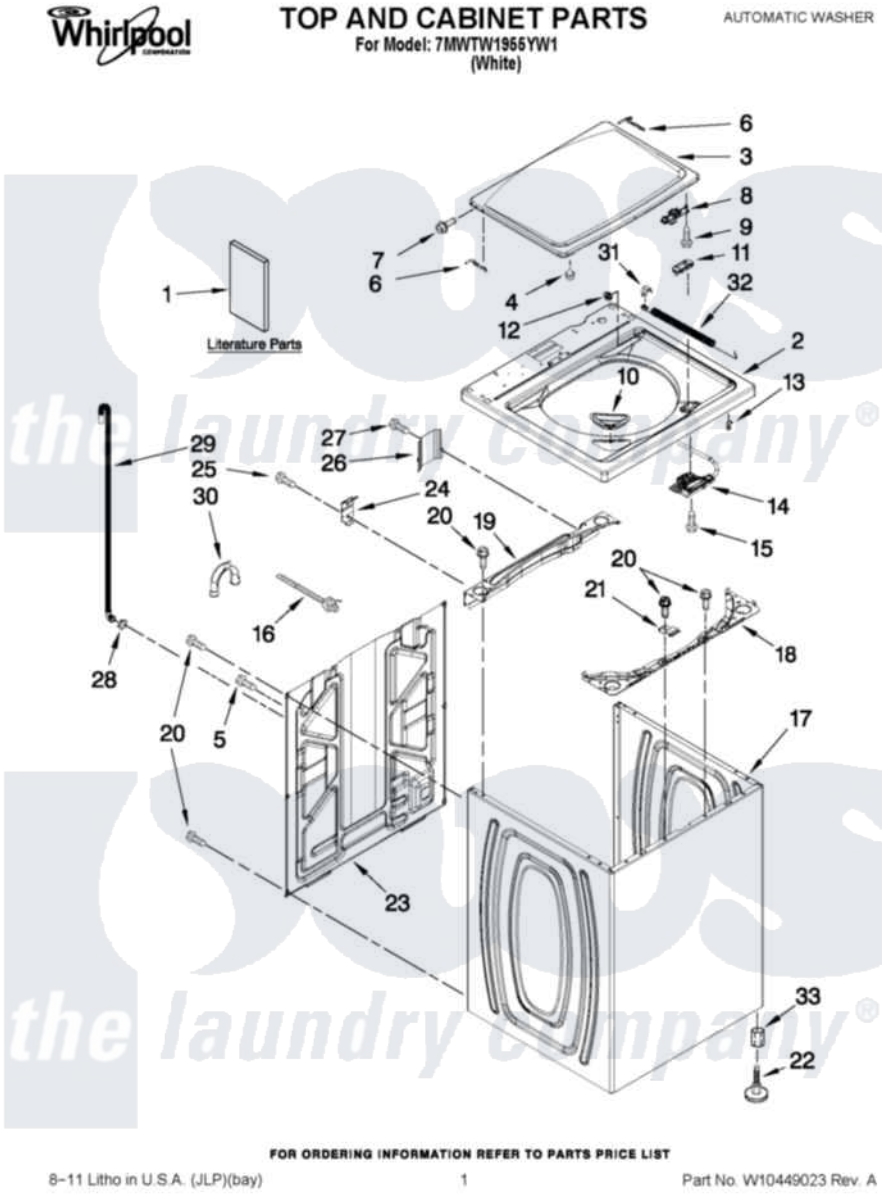

Whirlpool Residential Whirlpool 7MWTW1955YW1 Washer Parts Parts Diagram 01 - TOP AND CABINET PARTS
Click on the part number to view part

Item	Original Part Number	Replaced By	Status	Part Description
1	W10329765		Not Available	INSTALLATION INSTRUCTIONS
"	W10366277		Not Available	USE & CARE GUIDE
"	W10280489		Not Available	INSTALLATION (TECH SHEET)
"	W10366274		Not Available	QUICK START GUIDE
"	W10366291		Not Available	ENERGY GUIDE
2	W10354405			Top
3	W10427058		Not Available	LID (INCLUDES ITEM 4)
4	9724509			Bumper, Lid
5	9740848			Screw, Mixing Valve Mounting
6	91770			Hinge, Lid
"	W10202542			Hinge, Lid
7	W10119872	W10119828		Screw, Lid Hinge Mounting
8	W10240513			Strike, Lid Lock
9	W10273971			Screw, 6-19 X 1/2
10	W10192089			Dispenser, Bleach

11	W10392041		Bezel, Lid Lock
12	8319539		Bearing, Lid Hinge
13	90016		Clip, Pressure Switch Hose
14	W10238287	W10404050	Latch
15	8281163		Screw, Dispenser Housing Mounting
16	W10339879		Tie, Cable
17	W10251994	W10338650	Cabinet
18	W10215098		Brace, Cabinet Top Front
19	W10215099		Brace, Cabinet Top Rear
20	1157158	489069	Xxscrew, 10-12 X 1/2
21	W10248088		Lock, Top
22	W10335586	W10397767	Foot Assembly, Leveling
23	W10250884		Panel Rear
24	W10215102		Hinge, Top
25	W10142728	3370225	Screw
26	W10215139		Cover, Harness
27	3400076		Screw, Bracket Mounting
28	356138		Clamp, Hose
29	W10221546		Hose, Outer Drain Assembly
30	W10280024		U-Bend, Drain Hose
31	3350828		Clip-Cylinder Retainer
32	W10354402		Spring, Assembly
33	3359452		Nut, Lock

the laundry company®