Whirlpool 7MWTW9013YQ0 03 - AGITATOR, BASKET AND TUB PARTS

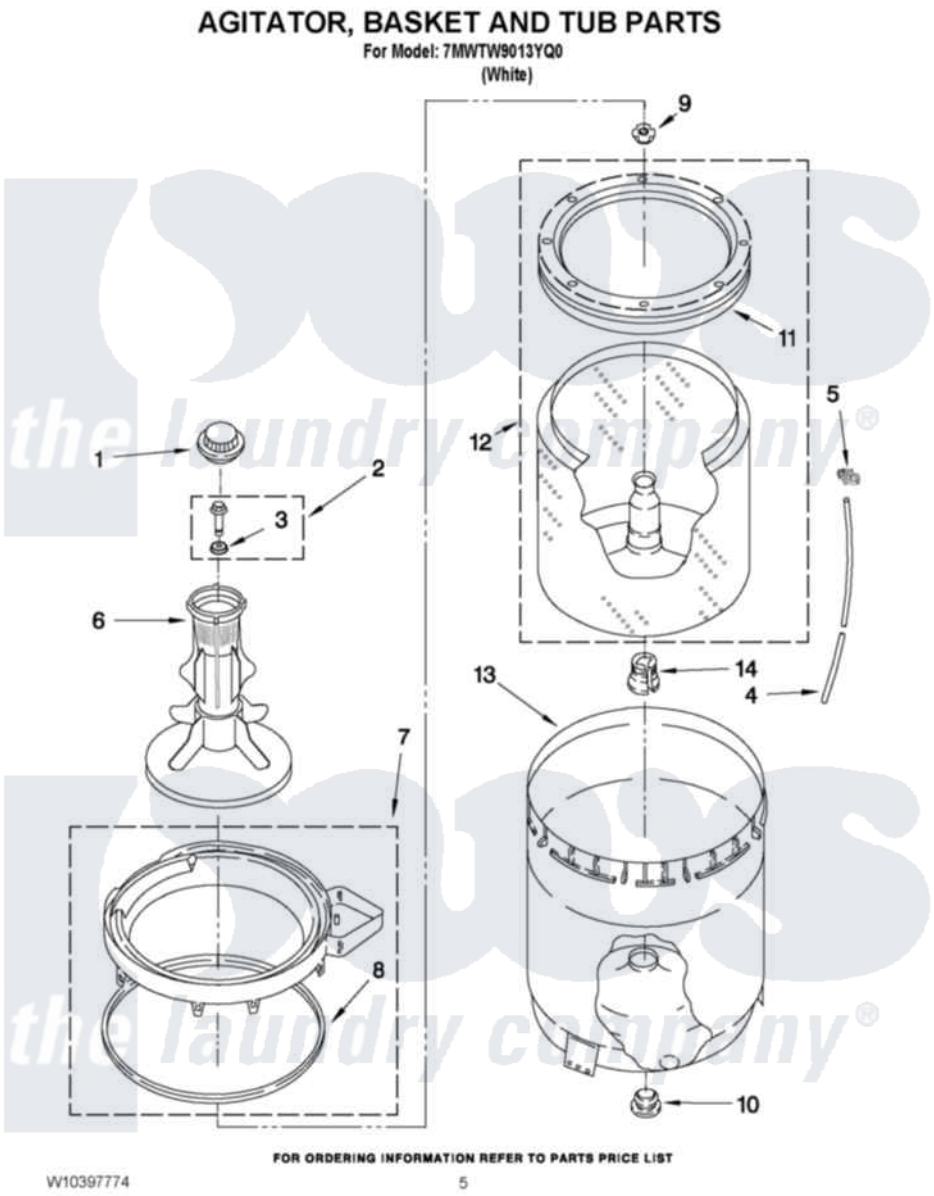

Whirlpool Residential Whirlpool 7MWTW9013YQ0 Washer Parts Parts Diagram 03 - AGITATOR, BASKET AND TUB PARTS

Click on the part number to view part

Item	Original Part Number	Replaced By	Status	Part Description
1	3355758			Cap, Agitator
2	358237			Screw And Washer
3	3949550			Washer
4	3347780	353244		Hose, Pressure Switch
5	2219077			Clip, Pressure Switch Hose
6	63235			Agitator Assembly
7	8528150	W10445870		Ring-Tub
8	3976308			Gasket, Tub Ring
9	21366			Nut, Spanner
10	383727			Gasket, Centerpodt
11	387240			Ring, Balance
12	W10389329			Clothes Container, Assembly
13	63849			Strain Relief, Power Cord
14	389140			Tub Block, Basket Drive