Whirlpool GGW9868KQ3 04 - 8318276 BURNER ASSEMBLY

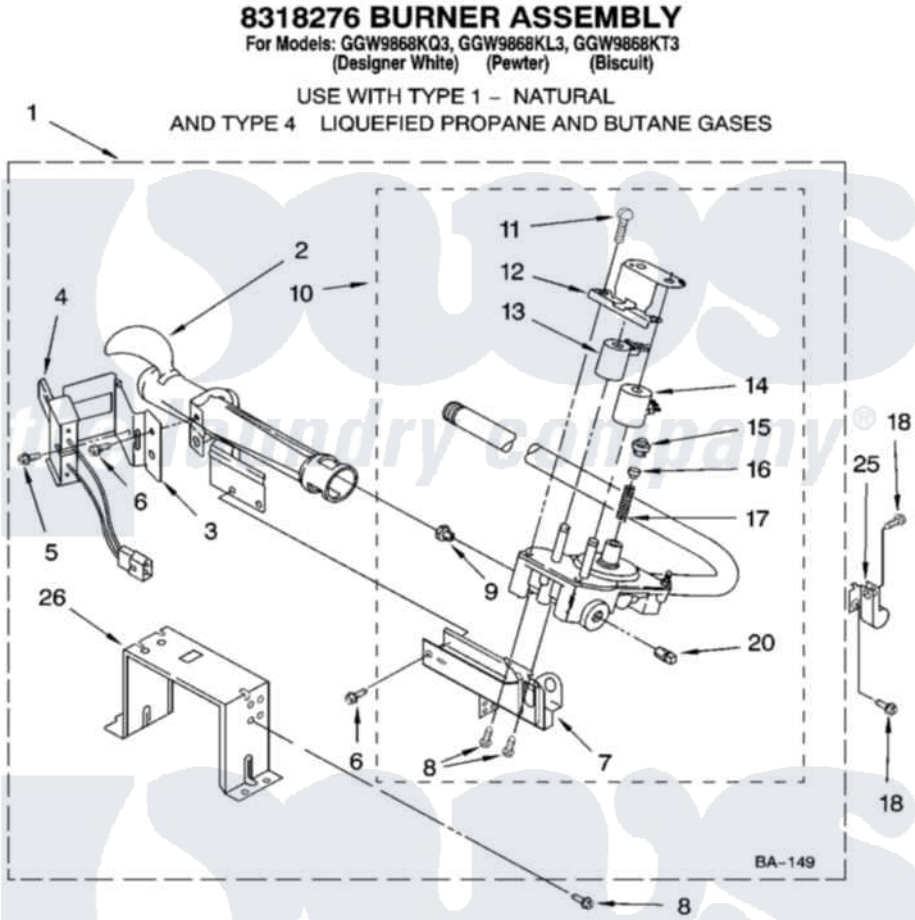

Whirlpool Residential Whirlpool GGW9868KQ3 Dryer Parts Parts Diagram 04 - 8318276 BURNER ASSEMBLY
Click on the part number to view part

Item	Original Part Number	Replaced By	Status	Part Description
1	8318276	280119		Burner-Gas
2	688617	693140		Burner
3	694298			Bracket, Ignitor
4	686590	279311		Ignitor
5	3393909			Screw, 8-32 X 7/8
6	343641	681414		Screw, 10AB X 1/2
7	3389871		Not Available	Base, Burner
8	3387057			Screw, 10-16 X 1/2 Orifice, Burner
9	234826			Orifice, Burner Type 1
"	229742			Orifice, Burner
"	234868			Orifice, Burner
10	8318281	W10480542		Valve-Gas
11	694421			Screw, Bracket Mounting
12	694538			Bracket, Shunt
13	694540			Coil, 60 Hz
14	694539			Coil, 60 Hz

15	694424			Leak, Limiter
16	694423			Screw, Regulator Adjustment
17	694422			Spring, Regulator
18	3390647	488729		Screw
20	239822	W10295523		Plug, Pipe
25	3387561			Clamp-Pipe
26	3389889			Bracket, Support
"	N/A		Not Available	FOLLOWING PARTS NOT ILLUSTRATED
"	694572	49572A		Conversion Kit To Type L.p.g.f

the laundry company®
the laundry company®
the laundry company®