Whirlpool GHW9400PL1 01 - TOP AND CABINET PARTS

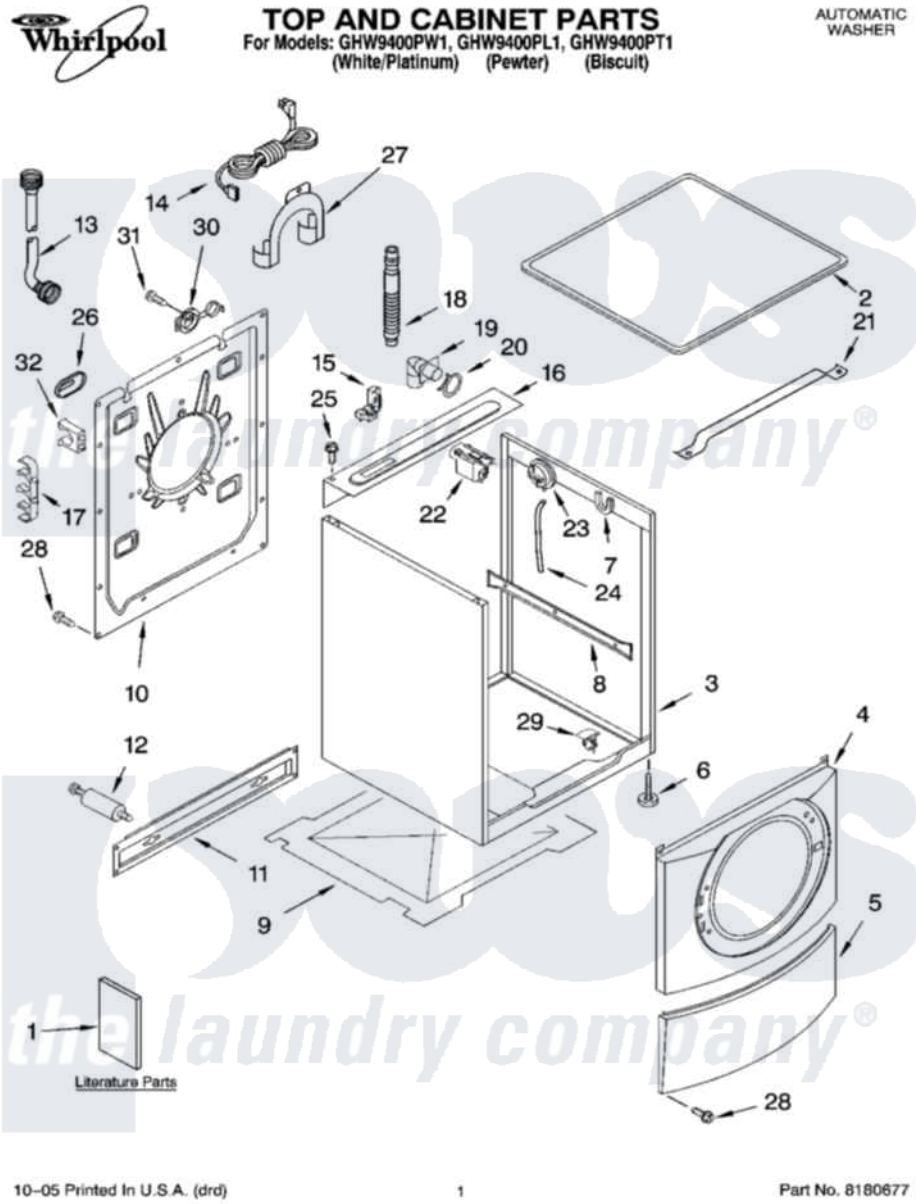

Whirlpool Residential Whirlpool GHW9400PL1 Washer Parts Parts Diagram 01 - TOP AND CABINET PARTS
Click on the part number to view part

Item	Original Part Number	Replaced By	Status	Part Description
1	8182676		Not Available	Use & Care Guide
"	8182677			Tech Sheet
"	8182278		Not Available	Energy Guide
"	8182270		Not Available	DVD-Instruction
"	8182658			Quick Start Guide
2	8181641			Top
"	8182061			Top
"	8181830			Top
3	8181630	8182609		Cabinet
"	8182063			Cabinet
"	8181805			Cabinet
4	8181838			Panel, Front
"	8182060			Panel, Front
"	8182059			Panel, Front
5	8181643			Toe Panel
"	8182062			Toe Panel

"	8181809			Toe Panel
6	8181636			Foot, Leveling
7	8181763			Bracket, Spring
8	8181634			Brace, Side Panel
9	8181635			Pan, Bottom
10	8182698			Panel, Rear
11	8182661	W10003040		Brace, Transport
12	8182124	W10289554A		Bolt
"	8182125	W10289554A		Bolt
13	8181706	76314		Hose, Inlet 6 Ft. Hose With Elbow
"	8181707	76314		Hose, Inlet 6 Ft. Hose With Elbow
14	8182649			Cord, Power
15	8181690	8182635		Strain Relief
16	8182116	W10138248		Brace, Rear
17	8182701			Clip, Outer Hose Holder
18	8181737			Hose, Drain
19	8181738			Connector, Hose Outlet
20	8181752	3367052		Clamp, Hose
21	8181632			Brace, Top
22	8181683	W10326464		Filter, Interference
23	8181695			Switch, Pressure
24	8181739	W10004260		Hose, Pressure Switch
25	8181691			Screw
26	8182700	8540268		Cover, Transport
27	8181768	W10280024		U-Bend, Drain Hose
28	8181828	488729		Screw
29	8181930	W10085220		Microswitch
30	8182699			Grommet, Cord Support
31	8182201			Screw, 3 X 8 mm
32	8182702			Clip, Outer Hose Holder
"	N/A		Not Available	FOLLOWING PARTS NOT ILLUSTRATED
"	8182109			Harness Channel

the laundry company®