Whirlpool GVW9959KQ3 05 - BRAKE, MOTOR AND PUMP PARTS

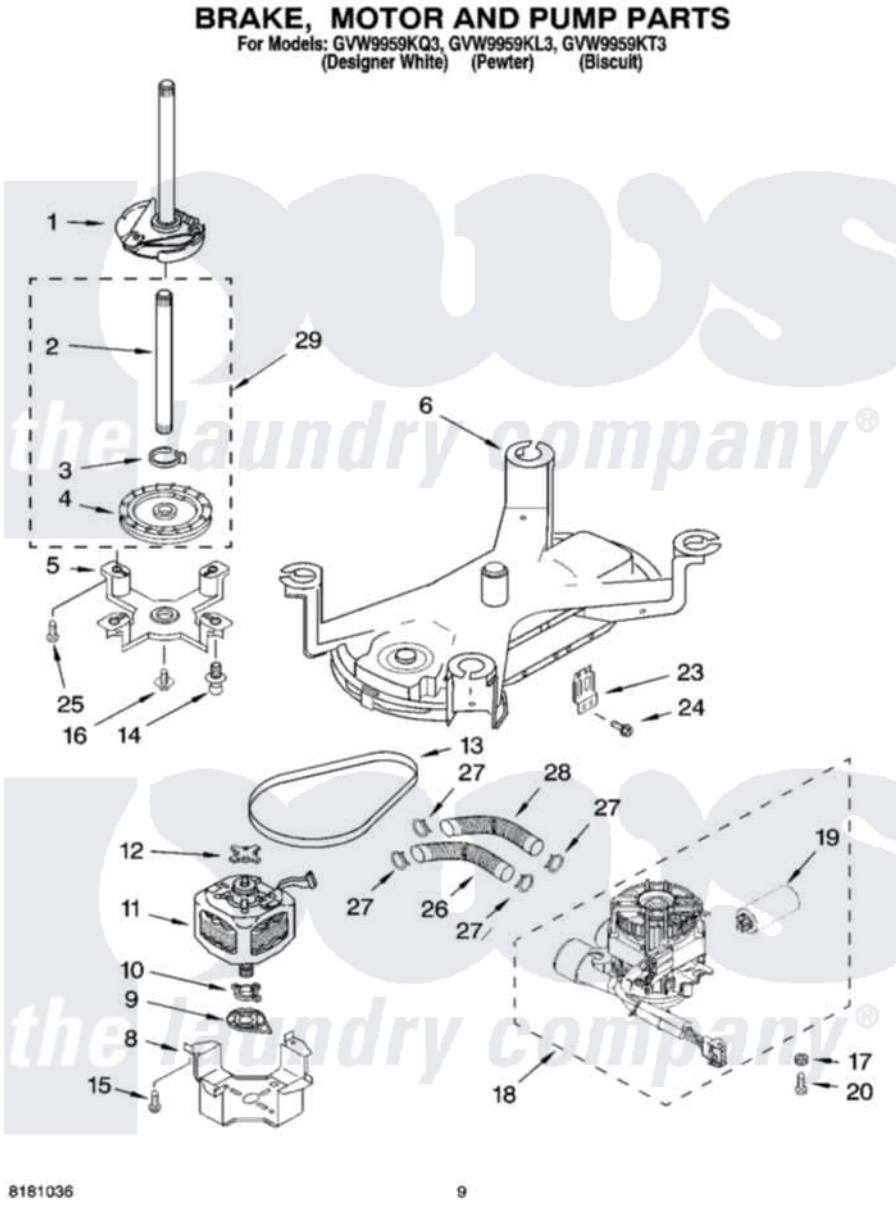

Whirlpool Residential Whirlpool GVW9959KQ3 Washer Parts Parts Diagram 05 - BRAKE, MOTOR AND PUMP PARTS
Click on the part number to view part

Item	Original Part Number	Replaced By	Status	Part Description
1	8271972			Brake And Drive Tube
2	8055094			Shaft, Washplate
3	8055224			Spring Assembly
4	8282498			Pulley, Drive
5	8055091			Bearing Plate, Lower Drive
6	8054942			Support, Tub
8	8283349			Plate, Motor
9	8054912			Socket, Isolator
10	8054996			Isolator, Motor
11	9724551	285917		Motor-Drve
12	8054913			Isolator, Motor
13	8562613			Belt, Drive
14	8272127		Not Available	Stud, Ball (2)
15	3400214			Screw
16	8055225			Screw, 1/4 X 3/4
17	8283536			Isolator, Pump Motor

18	8544412	285990		Motor-Pump
19	8571814			Capacitor, Pump Motor
20	3400206			Screw
23	9725000			Bracket, Motor Connector
24	3390631			Screw, 10-16 X 3/8
25	3400215		Not Available	Screw
26	8054944			Hose, Tub To Pump
27	371504	616099		Clamp
28	8054988			Hose, Tub To Pump
29	8055089			Pulley Assembly- Drive

the laundry company®
the laundry company®
the laundry company®