Whirlpool IL44000 01 - TOP AND CABINET PARTS

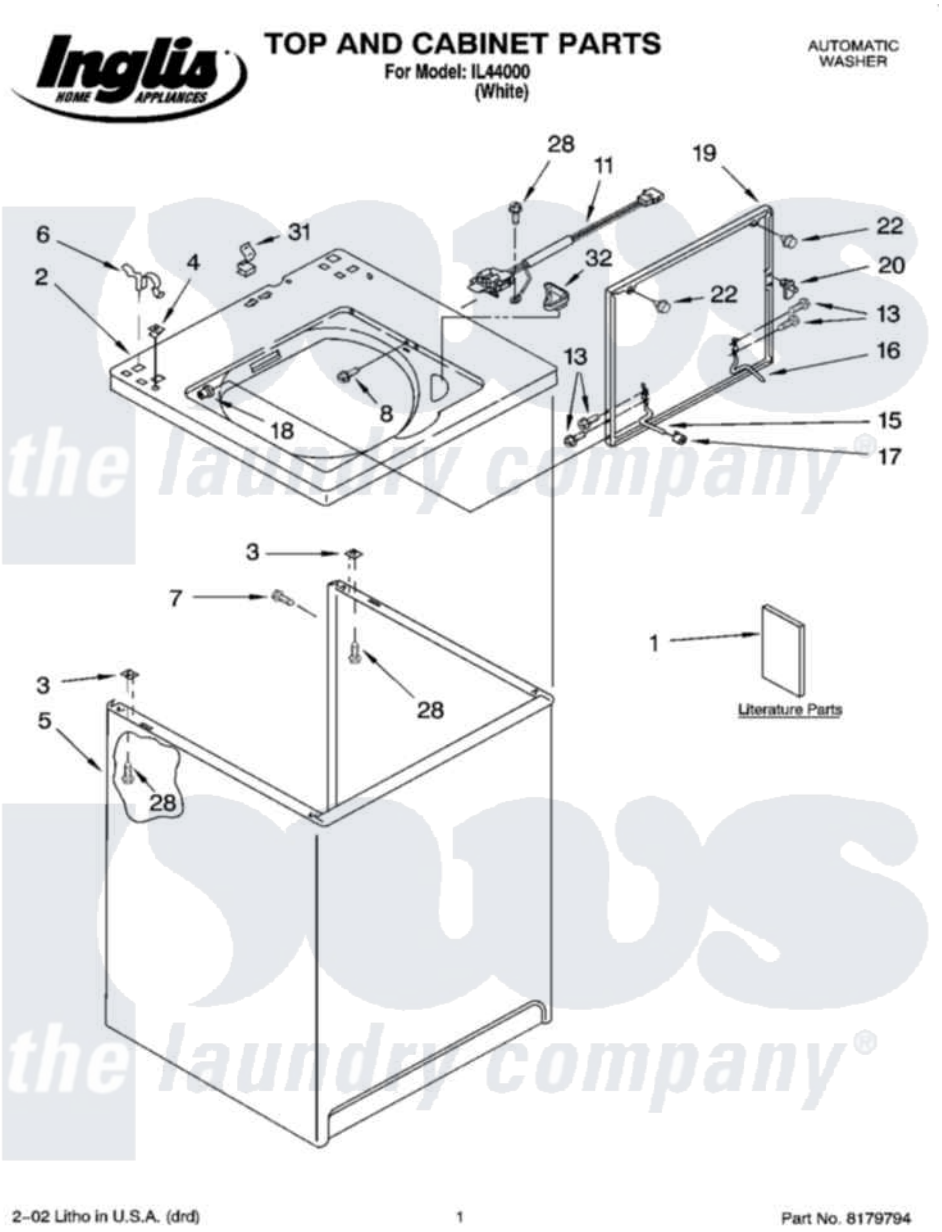

Whirlpool Residential Whirlpool IL44000 Washer Parts Parts Diagram 01 - TOP AND CABINET PARTS
Click on the part number to view part

Item	Original Part Number	Replaced By	Status	Part Description
1	LIT3361044		Not Available	Literature Parts (Installation Instructions)
"	LIT3955167		Not Available	Literature Parts (Use & Care Guide)
"	LIT3955522		Not Available	Literature Parts (Energy Guide)
"	LIT3955498		Not Available	Literature Parts (Wiring Diagram)
2	8271378			Top
3	62750			Spacer, Cabinet To Top (4)
4	357213			Nut, Push-In
5	63424			Cabinet
6	62780			Clip, Top And Cabinet And Rear Panel
7	3357011	308685		Side Trim)
8	3356311			Screw And Washer, Lid Switch Shield
11	3949237	3949247		Switch-Lid
13	3351355	W10119828		Screw, Lid Hinge Mounting

15	54584		Hinge, Lid
16	91770		Hinge, Lid
17	19119		Bumper, Lid Hinge
18	21258		Bearing, Lid Hinge
19	3361411	W10193874	Lid
20	358684		Strike, Lid Switch
22	9724509		Bumper, Lid
28	3390631		Screw, 10-16 X 3/8
31	90016		Clip, Pressure Switch Hose
32	3362952		Dispenser, Bleach

the laundry company®
the laundry company®
the laundry company®