Whirlpool IP44004 02 - CONTROLS AND REAR PANEL PARTS

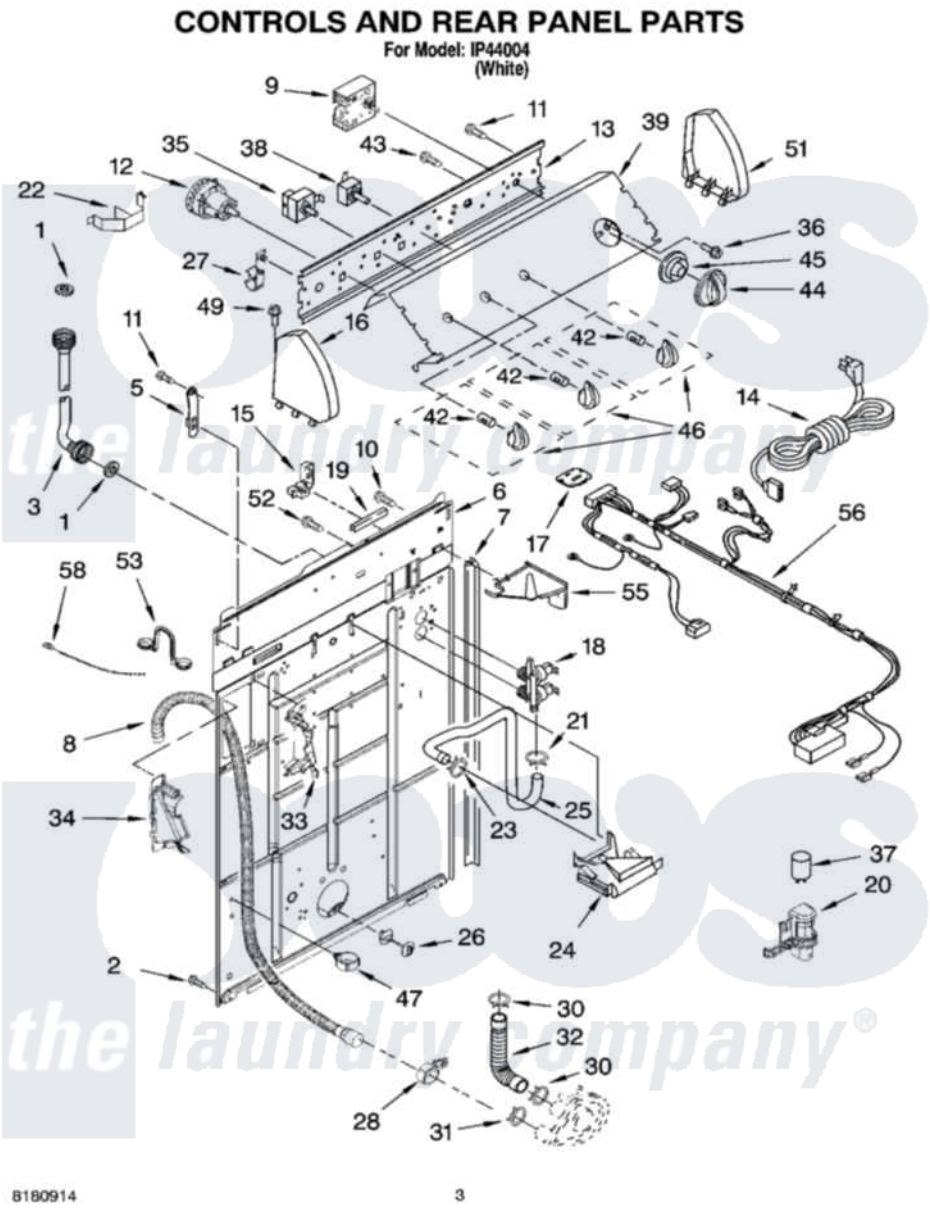

Whirlpool Residential Whirlpool IP44004 Washer Parts Parts Diagram 02 - CONTROLS AND REAR PANEL PARTS
Click on the part number to view part

Item	Original Part Number	Replaced By	Status	Part Description
1	3976300	16123		Washer Inlet-Hose Miscellaneous Parts Must be Ordered Separately.
2	62863	3390631		Screw, 10-16 X 3/8
3	8571377	89503		Hose-Inlet
"	8571378	89503		Hose-Inlet
5	8568314			Strap, Console
6	8318015			Panel, Rear
7	62747			Pad, Rear Panel
8	8559373	W10096921		Drain Hose Assembly
9	8557301			Timer, Control
10	3351614			Screw, Gearcase Cover Mounting
11	90767			Screw, 8A X 3/8 HeX Washer Head Tapping
12	8528337	W10339317		Switch-WL
13	3948608			Bracket, Control
14	661661	285800		Cord-Power

15	3952821	285777		Relief-Str
16	8271365	279962		Endcap
17	3955787	3955728		Control, Etc
18	3979347	3979346		Valve, Water Inlet And Thermistor Assembly
19	303294	3367669		Protector, Edge
20	8318046			Clip, Capacitor
21	301958	596669		Clamp, Manifold
22	8055003			Clip, Harness And Pressure Switch
23	370450	596669		Clamp, Manifold
24	387606	3360977		Break-Vac
25	8317974	8317926		Hose, Vacuum Break
26	8519200			Support, Rear Panel
27	8317975			Restraint, Harness
28	8541668			Clamp, Hose
30	3363366	616099		Clamp
31	8317496	285655		Clamp, Hose
32	3951449	285871		Hose
33	8541669			Bucket, Drain Hose
34	8541658			Bucket, Drain Hose
35	8557872			Switch, Water Temperature
36	3400818			Screw, Timer Mounting
37	8572717			Capacitor, Motor Start
38	3949187	W10168262		Switch, Rotary
39	3954242		Not Available	Panel, Console
42	8536939			Clip, Knob
43	3400073			Screw, Ground
44	8543272		Not Available	Knob, Timer
45	8544947			Dial, Timer
46	8543270		Not Available	Knob, Control (3) (Grey)
47	8541667			Clamp, Hose
49	388326			Screw, 8-18 X 1.25
51	8271359	279962		Endcap
52	9740848			Screw, Mixing Valve Mounting
53	8541672	8577378		U-Bend, Drain Hose
55	8539874			Shield, Suds
56	3957258		Not Available	Harness, Wiring (For Detail See Pages 9 & 10)
58	3347868	W10339879		Tie, Cable
"	BLANK		Not Available	Following Parts Not Illustrated
"	3957361			Miscellaneous Parts Bag

the laundry company®