Whirlpool LBR5432PQ2 01 - TOP AND CABINET PARTS

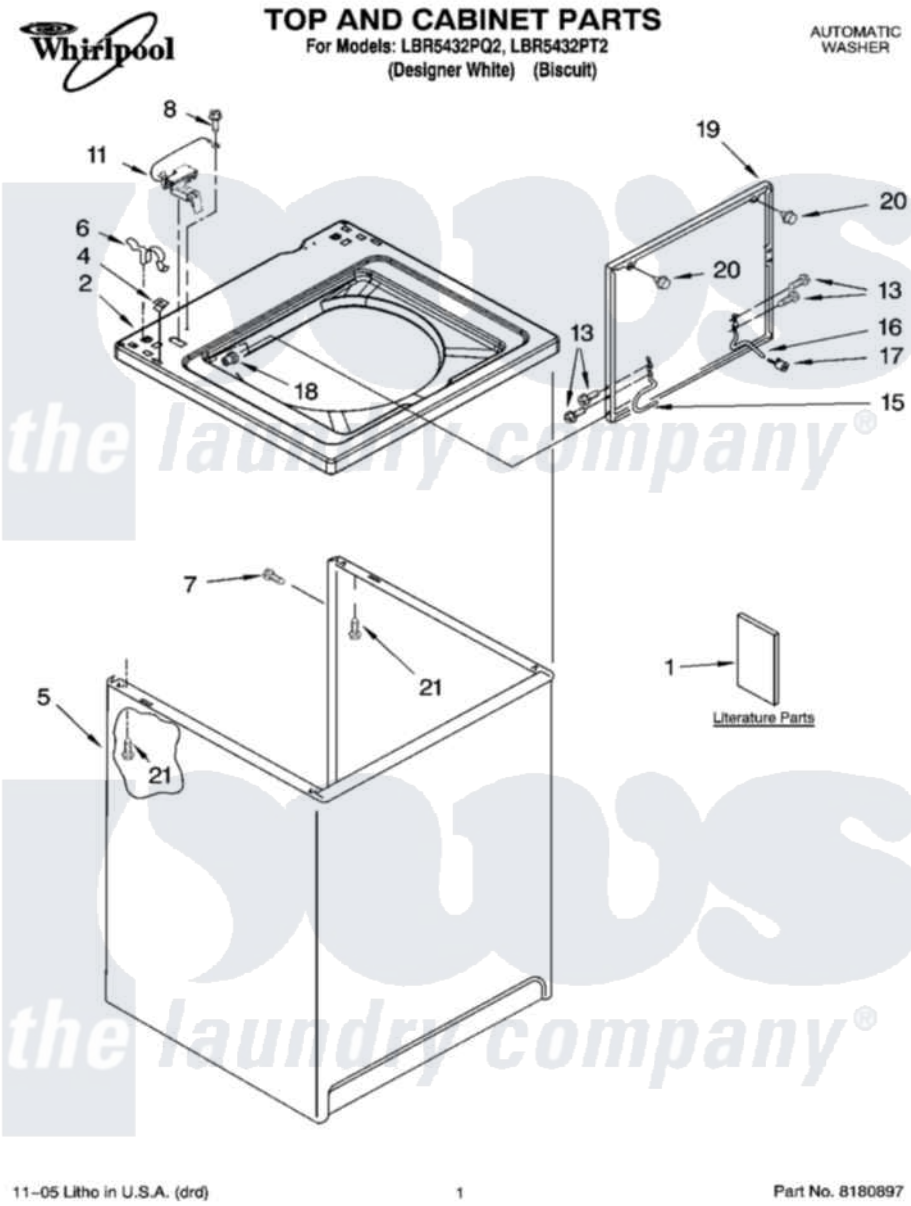

Whirlpool Residential Whirlpool LBR5432PQ2 Washer Parts Parts Diagram 01 - TOP AND CABINET PARTS
Click on the part number to view part

Item	Original Part Number	Replaced By	Status	Part Description
1	3958075		Not Available	Installation Instructions
"	3955901		Not Available	Feature Sheet
"	8578232		Not Available	Use & Care Guide
"	8557228		Not Available	Wiring Diagram
"	3957458		Not Available	Energy Guide
"	N/A		Not Available	Following May Be Purchased
"	N/A		Not Available	DO-IT-YOURSELF REPAIR MANUALS
"	4313896			Do-It-Yourself Repair Manuals
2	8541621			Top
"	8541623			Top
4	357213			Nut, Push-In
5	63128			Cabinet
"	3954777			Cabinet
6	62780			Clip, Top And Cabinet And Rear Panel
7	3357011	308685		Side Trim)

8	3351614		Screw, Gearcase Cover Mounting
11	8318084		Switch, Lid
13	3351355	W10119828	Screw, Lid Hinge Mounting
15	8318088		Hinge, Lid
16	54583		Hinge, Lid
17	19119		Bumper, Lid Hinge
18	21258		Bearing, Lid Hinge
19	8542383	W10193857	Lid
"	8542385	3957521	Lid
20	9724509		Bumper, Lid
21	3390631		Screw, 10-16 X 3/8

the laundry company®
the laundry company®
the laundry company®