Whirlpool LEN1000PQ0 02 - TOP AND CONSOLE PARTS

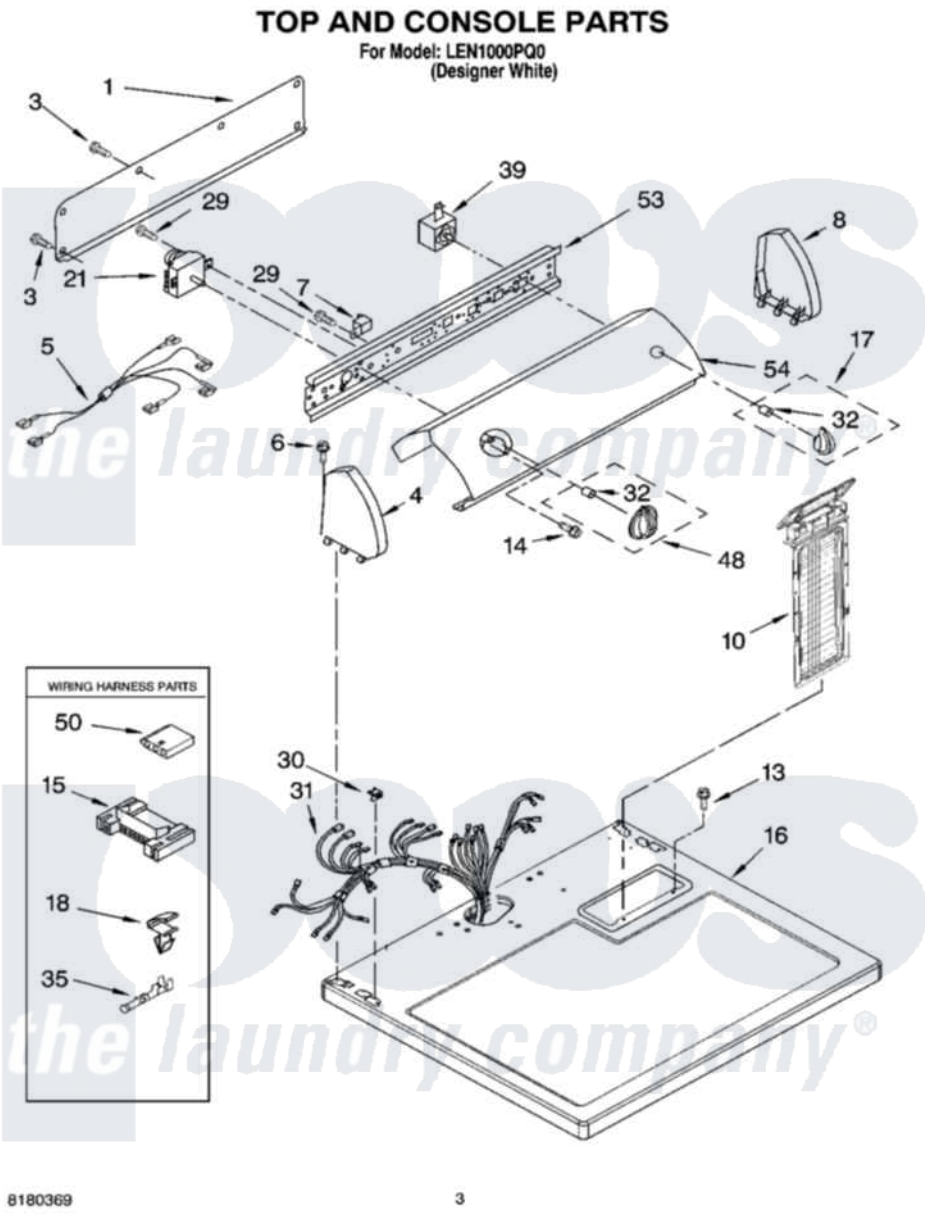

Whirlpool Residential Whirlpool LEN1000PQ0 Dryer Parts Parts Diagram 02 - TOP AND CONSOLE PARTS
Click on the part number to view part

Item	Original Part Number	Replaced By	Status	Part Description
1	8274261			Do-It-Yourself Repair Manuals
3	693995			Screw, Hex Head
4	8271365	279962		Endcap
5	8539888			Jumper, Wire
6	388326			Screw, 8-18 X 1.25
7	694419			Mini-Buzzer
8	8271359	279962		Endcap
10	8557857			Screen, Lint
13	688983	487240		Screw, For Mtg. Service Capacitor
14	3400859			Screw, Grounding
15	3395683			Receptacle, Multi-Terminal
16	8557930	8563985		Top
17	8544935			Knob, Control
18	3394427			Clip-Harness
21	8299778			Timer, 60 Hz
29	3390646	W10139210		Screw, 8-18 X 5/16

30	357213		Nut, Push-In
31	8299869	8576501	Harns-Wire
32	8536939		Clip, Knob
35	94614		Terminal
39	3404233		Switch, Push-To-Start
48	8544955		Timer Knob Assembly
50	3936144		Do-It-Yourself Repair Manuals
53	8271418		Bracket, Control
54	8545971		Panel, Control

the laundry company®
the laundry company®
the laundry company®