Whirlpool LGB6300LW1 03 - BULKHEAD PARTS

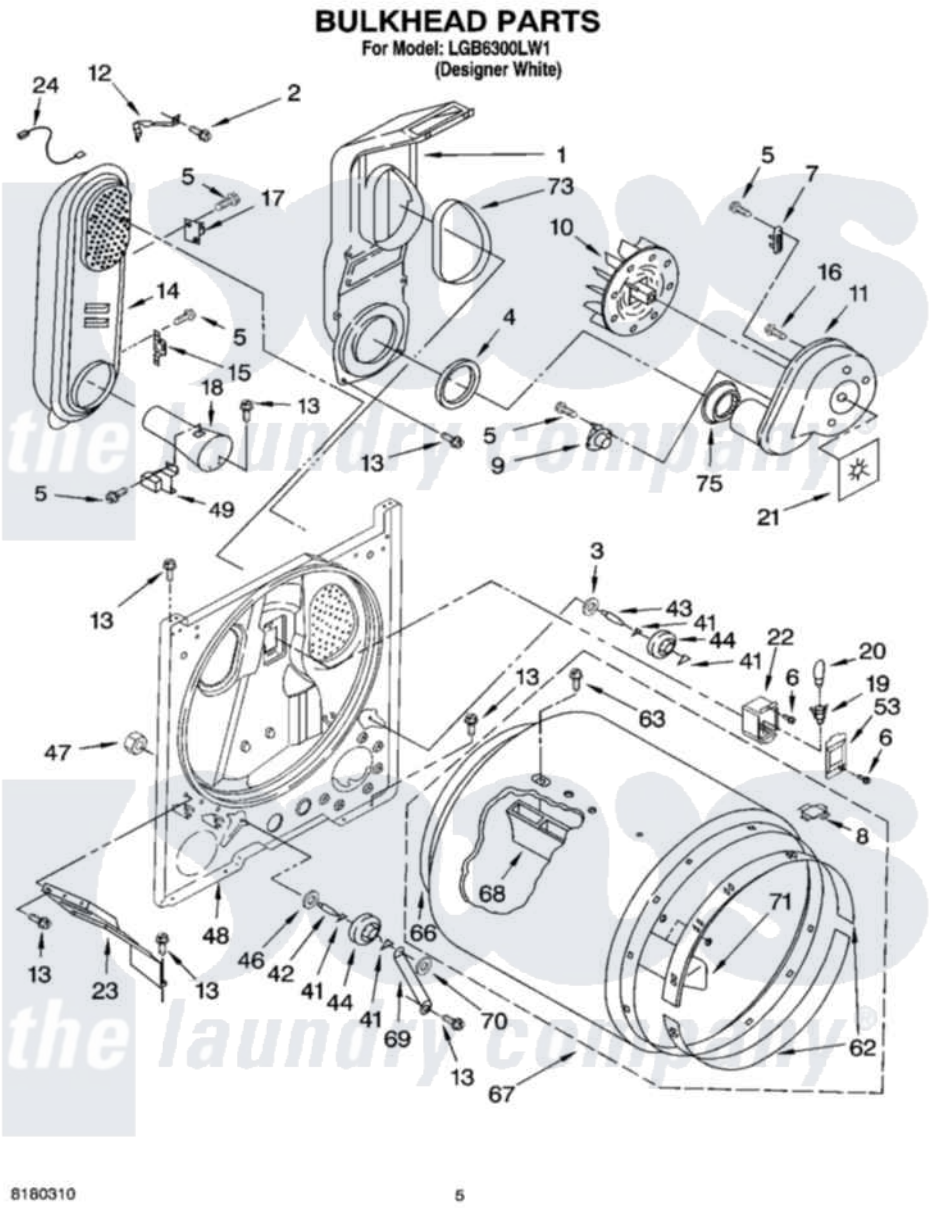

Whirlpool Residential Whirlpool LGB6300LW1 Dryer Parts Parts Diagram 03 - BULKHEAD PARTS
Click on the part number to view part

Item	Original Part Number	Replaced By	Status	Part Description
1	348368			Lint Chute Assembly
2	489463			Screw, 8-18 X 1/16
3	3388703			Washer, Support
4	347139			Seal, Lint Chute
5	90767			Screw, 8A X 3/8 HeX Washer Head Tapping
6	487909	488729		Screw
7	3392519			Thermal Limiter
8	8066086			Plug, Drum Hole
9	3387134			Thermostat, Internal-Bias
10	694089			Wheel, Blower
11	8557384	8577230		Housing, Blower
12	3398161			CLIP
13	343641	681414		Screw, 10AB X 1/2
14	8530285	279980		Box
15	3403140			Thermostat, High-Limit 205F
16	3390647	488729		Screw

17	280010		Kit, Thermal Cut-Off
18	8066049		Funnel, Burner Light
19	3403634	W10136369	Socket, Drum Light Assembly
20	3406124	22002263	Lamp
21	3394196		Seal, Blower Shaft
22	3977373		Bracket, Drum Light
23	3406022		Bracket, Bulkhead
24	3401707		Jumper, Tco-High Limit
41	690997		Washer, Thrust
42	3399506	W10359270	Shaft, Drum Roller Threads
43	3399507	W10359269	Shaft, Drum Roller Threads
44	3397588	349241T	Support
46	348197		Washer, Support
47	3359452		Nut, Lock
48	3403413		Bulkhead
49	338906		Radiant, Sensor
53	3402841	8532165	Lens, Drum Light
62	692526	279441	BeaRng-Rng
63	97787	W10109200	Screw, Baffle Mounting
66	3406130	279857	Seal
67	695587		Drum Assembly
68	692490		Baffle, Drum
69	3976434		Bracket, Support Shaft
70	90296		Nut, Push On
71	3403636		Baffle, Drum
73	339956		Seal, Air Duct To Bulkhead
75	696302		Shield, Exhaust

the laundry company®