Whirlpool LSQ9550PW3 07 - BRAKE AND DRIVE TUBE PARTS

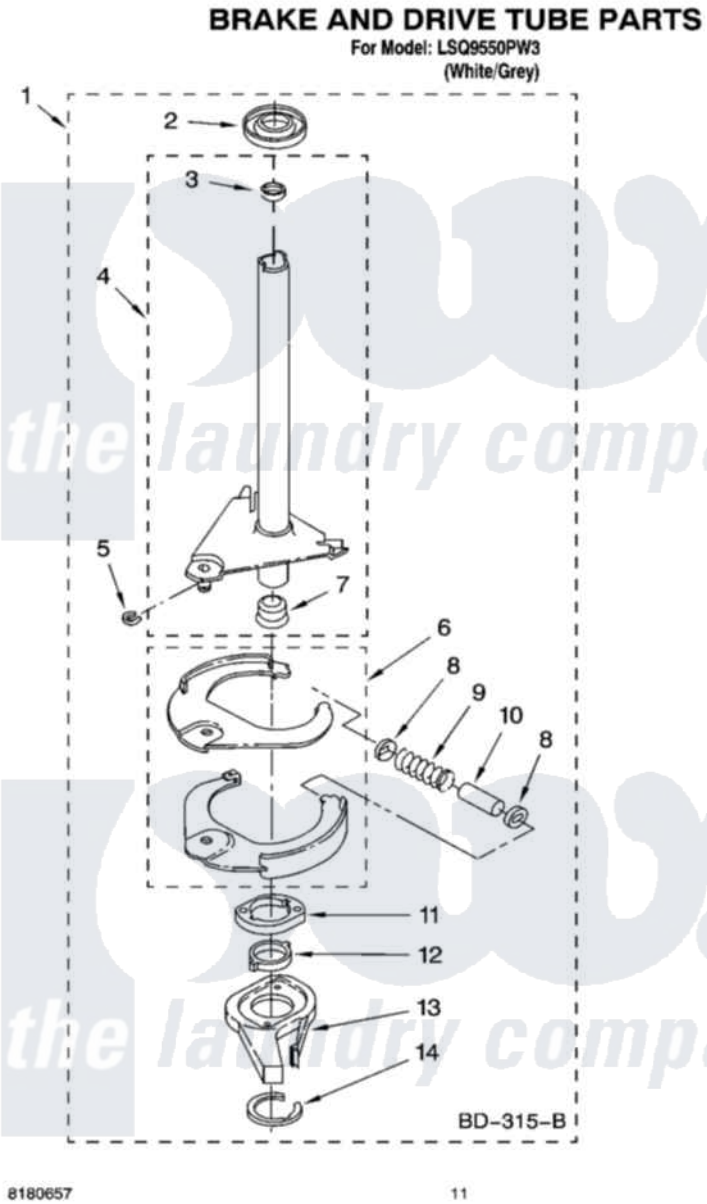

Whirlpool Residential Whirlpool LSQ9550PW3 Washer Parts Parts Diagram 07 - BRAKE AND DRIVE TUBE PARTS
Click on the part number to view part

Item	Original Part Number	Replaced By	Status	Part Description
1	388952	285792		Basktdrive
2	62658			Ring, Thrust
3	356427			Seal, Spin Pinion
4	64027	64208		Tube-Spin
5	64035	W10083190		Ring, Retaining
6	64232	285438		Shoe-Brake
7	62703	8546462		"T" Bearing, Spin Tube
8	3353956	285658		Sleeve
9	387806		Not Available	Spring, Brake
10	3355360	285658		Sleeve
11	661516	8546461		Cam, Brake Release
12	63022			Sleeve, Cam
13	64194	285790		Lining
14	90368	W10083200		Ring, Retaining
"	BLANK		Not Available	Following Parts Not Illustrated
"	285208			Lubricant