Whirlpool TAWX400RQ1 03 - AGITATOR, BASKET AND TUB PARTS

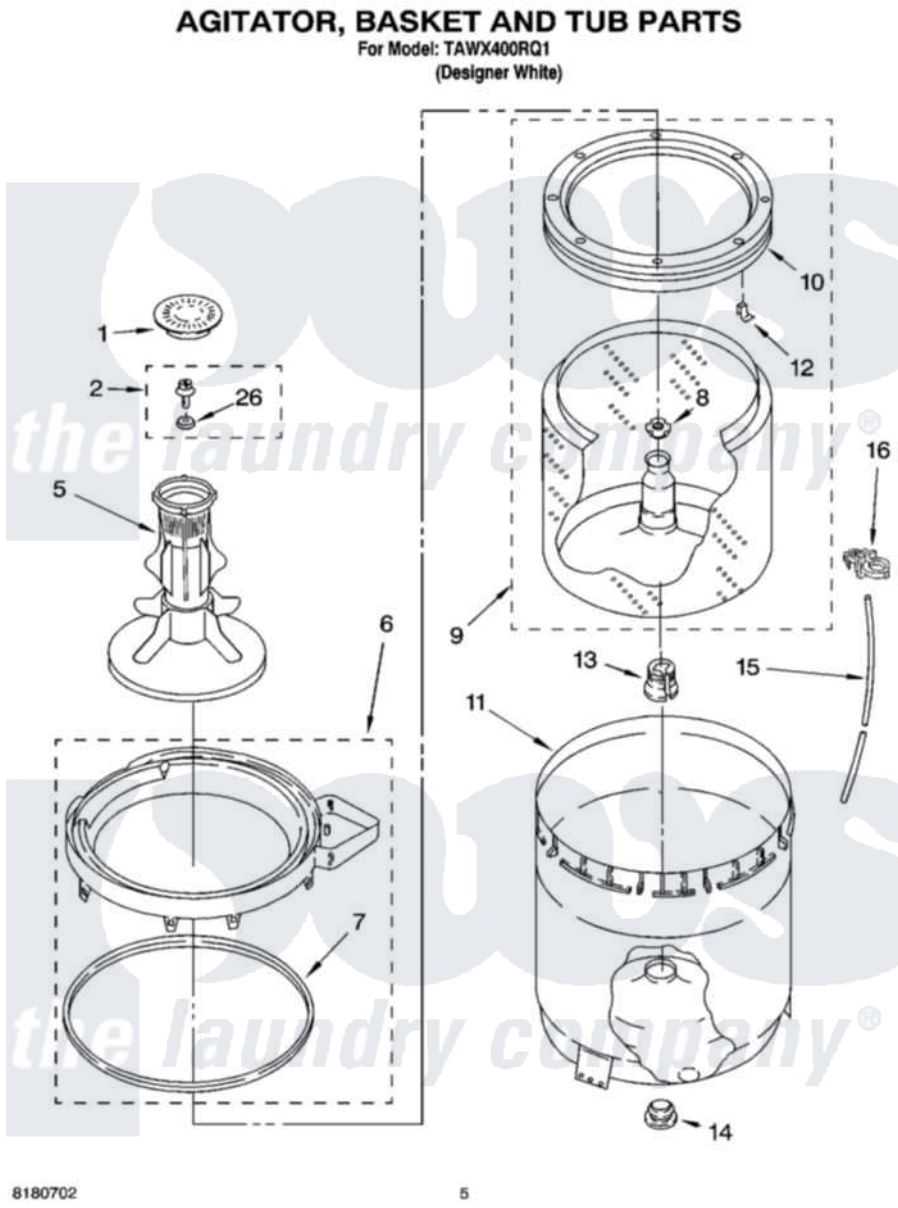

Whirlpool Residential Whirlpool TAWX400RQ1 Washer Parts Parts Diagram 03 - AGITATOR, BASKET AND TUB PARTS
Click on the part number to view part

Item	Original Part Number	Replaced By	Status	Part Description
1	3352483			Cap, Agitator
2	358237			Screw And Washer
5	63377			Agitator
6	3360611			Tub Ring And Gasket Assembly
7	3359586			Gasket, Tub Ring
8	21366			Nut, Spanner
9	3956206	3956207		Basket And Balance Ring
10	3956205			Balance Ring
11	63125			Tub
12	8519815			Clip, Balance Ring
13	389140			Tub Block, Basket Drive
14	383727			Gasket, Centerpodt
15	3347780	353244		Hose, Pressure Switch
16	2219077			Clip, Pressure Switch Hose
26	3949550			Washer