# Whirlpool TEDX540RQ0 02 - CABINET PARTS

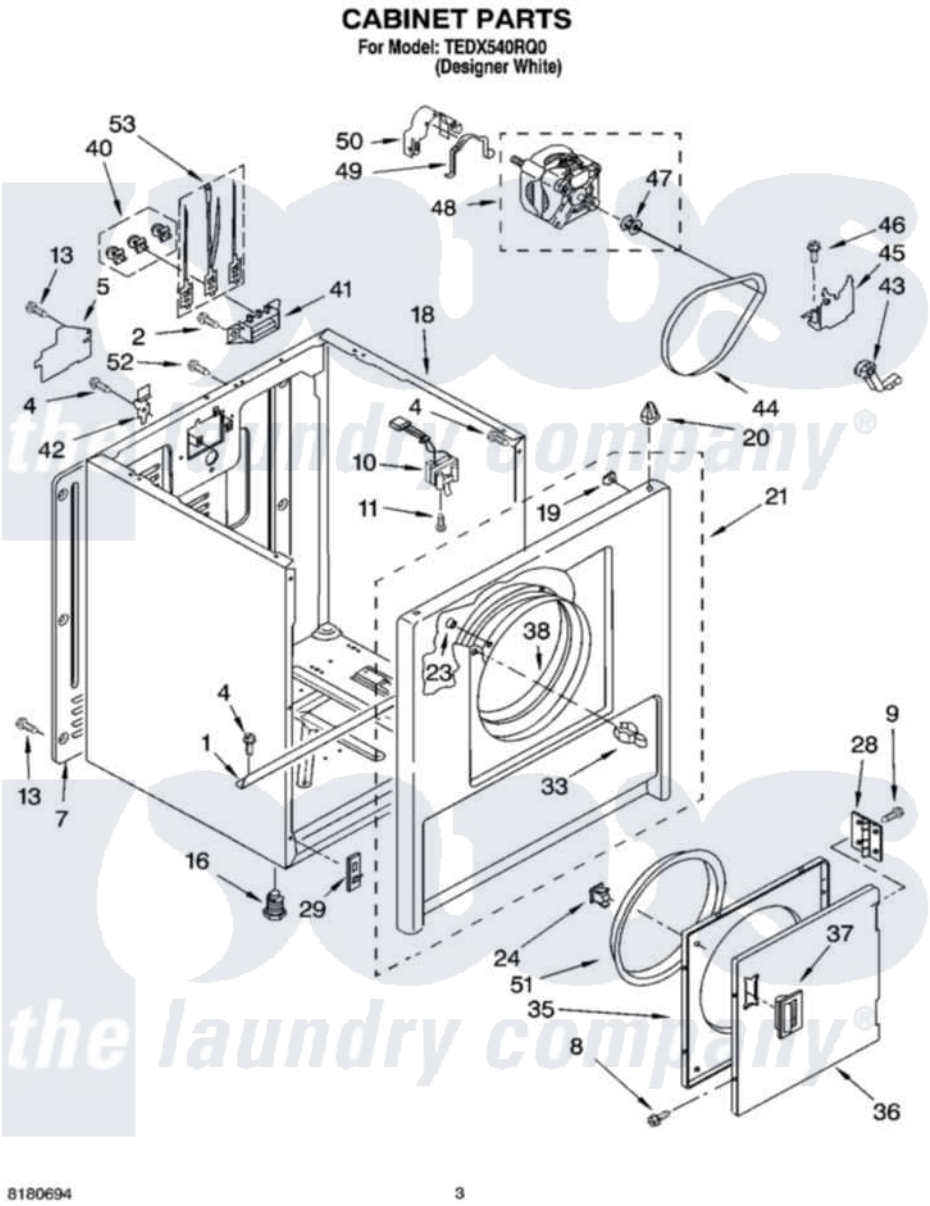


Whirlpool Residential Whirlpool TEDX540RQ0 Dryer Parts Parts Diagram 02 - CABINET PARTS
Click on the part number to view part

| Item | Original Part Number | Replaced By | Status | Part Description |
|---|---|---|---|---|
| 1 | 8541400 | | | Bracket, Cabinet |
| 2 | 3393008 | 308685 | | Side Trim ) |
| 4 | 343641 | 681414 | | Screw, 10AB X 1/2 |
| 5 | 3396795 | | | Cover, Terminal Block |
| 7 | 3396807 | 280040 | | Panel-Rear |
| 8 | 342055 | 488627 | | Screw |
| 9 | 694091 | | | Trim, Side Right Hand |
| 10 | 3406102 | | | Door Switch Assembly |
| 11 | 697773 | 3395530 | | Screw |
| 13 | 693995 | | | Screw, Hex Head |
| 16 | 3392100 | 49621 | | Feet-Leveling |
| 18 | 8530603 | 8533643 | | Cabinet |
| 19 | 98234 | | | Clip, U-Bend |
| 20 | 690363 | 18776 | | Lock, Front Top |
| 21 | 693197 | 280062 | | Panel |
| 23 | 685203 | 279220 | | Clip |

| | | | |
|---|---|---|---|
| 24 | 3389441 | | Door Catch Assembly |
| 28 | 348023 | | Hinge And Pin Assembly |
| 29 | 3394083 | | Clip, Front Panel |
| 33 | 696144 | 279570 | Latch |
| 35 | 695656 | 280077 | Door |
| 36 | 348205 | | Door, Front |
| 37 | 686711 | | Handle, Door |
| 38 | 8066123 | 279264 | Air Channel Box |
| 40 | 279393 | | Terminal Block Screw Kit |
| 41 | 3397659 | | Block, Terminal |
| 42 | 238088 | 8066217 | Hinge, Top |
| 43 | 691366 | | Idler And Pulley Assembly |
| 44 | 8066065 | 341241 | Belt |
| 45 | 348780 | | Base, Motor |
| 46 | 3400500 | | Bolt, 3405245 5/16-18 X 3/4 |
| 47 | 3394341 | W10299847 | Pulley-Motor |
| 48 | 8066206 | 279827 | Motor-Drve |
| 49 | 660658 | | Clamp, Motor Mounting 343481 685441 |
| 50 | 3404162 | | Clamp, Motor |
| 51 | 3390734 | | Seal, Door |
| 52 | 697776 | 4331106 | Screw, No.10-32 X 7/16 |
| 53 | 279318 | | Terminal Tinned And Brass Panel |

the laundry company®