Whirlpool WED9470WW1 03 - BULKHEAD PARTS

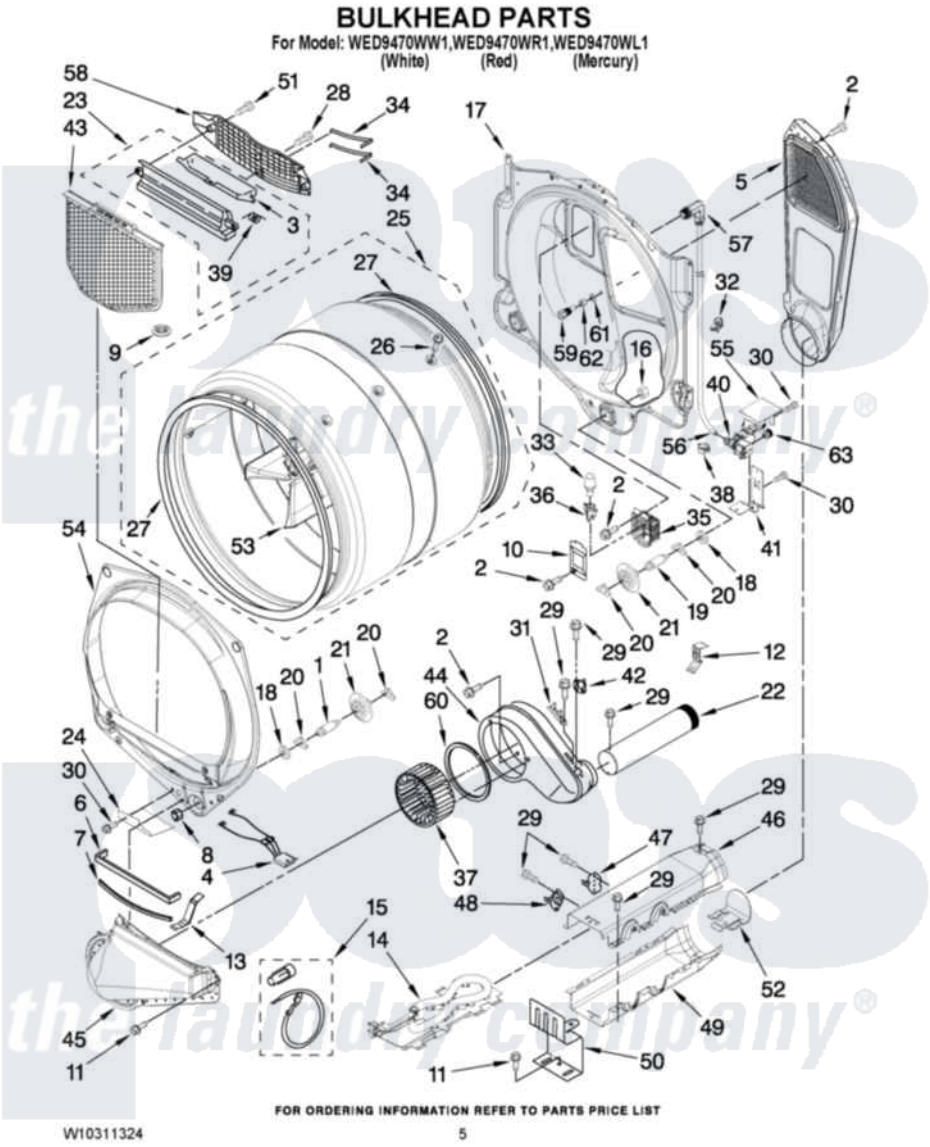

Whirlpool Residential Whirlpool WED9470WW1 Dryer Parts Parts Diagram 03 - BULKHEAD PARTS
Click on the part number to view part

Item	Original Part Number	Replaced By	Status	Part Description
1	8575324	W10359271		Shaft, Drum Roller Threads
2	3390647	488729		Screw
3	W10153413			Door, Lint Screen
4	3406653			Harness, Sensor
5	697354	3387911		Duct-Air
6	697813			Seal, Outlet Housing
7	697814	697813		Seal, Outlet Housing
8	3934666	W10080210		Nut, 3/8 X 16
9	W10128544			Housing-Outlet
10	3402841	8532165		Lens, Drum Light
11	489463			Screw, 8-18 X 1/16
12	8572105			Retainer, Toe Panel
13	8066208			Clip-Exhaust
14	8544771			Heater Element
15	279457			Wire Kit, Terminal
16	W10001120	W10080190		Nut, 3/8-16

17	W10133857		Bulkhead, Rear
18	3387459	W10080960	Washer, Support
19	8575325	W10359272	Shaft, Roller Drum Threads
20	690997		Washer, Thrust
21	8536973	W10314173	Support
22	8563745	279936	Kit-Exhst
23	W10153423		Outlet Grille, Housing Assembly
24	W10128629		Shield, Blower Housing
25	W10181466		Complete Drum Assembly
26	W10219342		Screw, Baffle Mounting
27	W10166807	280114	Seal
28	695240	488729	Screw
29	8533971	90767	Screw, 8A X 3/8 HeX Washer Head Tapping
30	90767		Screw, 8A X 3/8 HeX Washer Head Tapping
31	3392519		Thermal Limiter
32	3391018		Tie Cable
33	3406124	22002263	Lamp
34	3387223		Electrode, Sensor
35	8578825		Bracket, Drum Light
36	W10214261		Socket, Drum Light Assembly
37	697772		Wheel, Blower
38	W10044615		Clip, Push-To-Connect
39	3394986		Spring, Lint Screen Door
40	W10044596	W10044608	Valve
41	W10044597		Bracket-Valve
42	8577274		Thermostat 295F
43	W10049370	W10120998	Screen
44	8544362	W10119255	Housing, Blower
45	8066168	W10128606	Duct-Lint
46	8544769		Housing, Blower Lint Duct Assembly
47	8318314	279973	Kit, Thermal Cut-Off
48	3391914		Thermostat 295 F
49	8544770		Housing Slot, Heater Box
50	8066099		Bracket, Heater Box
51	3387230		Screw, 10-16 X 13/16
52	8544776		Flange, Heater Box
53	697693	W10113136	Baffle, Drum
54	W10252304		Bulkhead, Front
55	W10184825		Cover, Inlet Valve
56	W10044598	W10179730	Nozzle And Hose Assembly
57	W10154995		Nozzle And Hose Assembly
58	W10153412		Grille, Outlet
59	W10277503		Nozzle And Hose Assembly
60	697770		Seal, Cover Plate Blower Housing
61	W10044579		Washer, Nozzle Blower Housing
62	W10044628		Brass, Nut 9/16 - 24 X 1/32
63	W10044605		Coupling, Hose

the laundry company®