Whirlpool WET3300SQ1 10 - AGITATOR, BASKET AND TUB PARTS

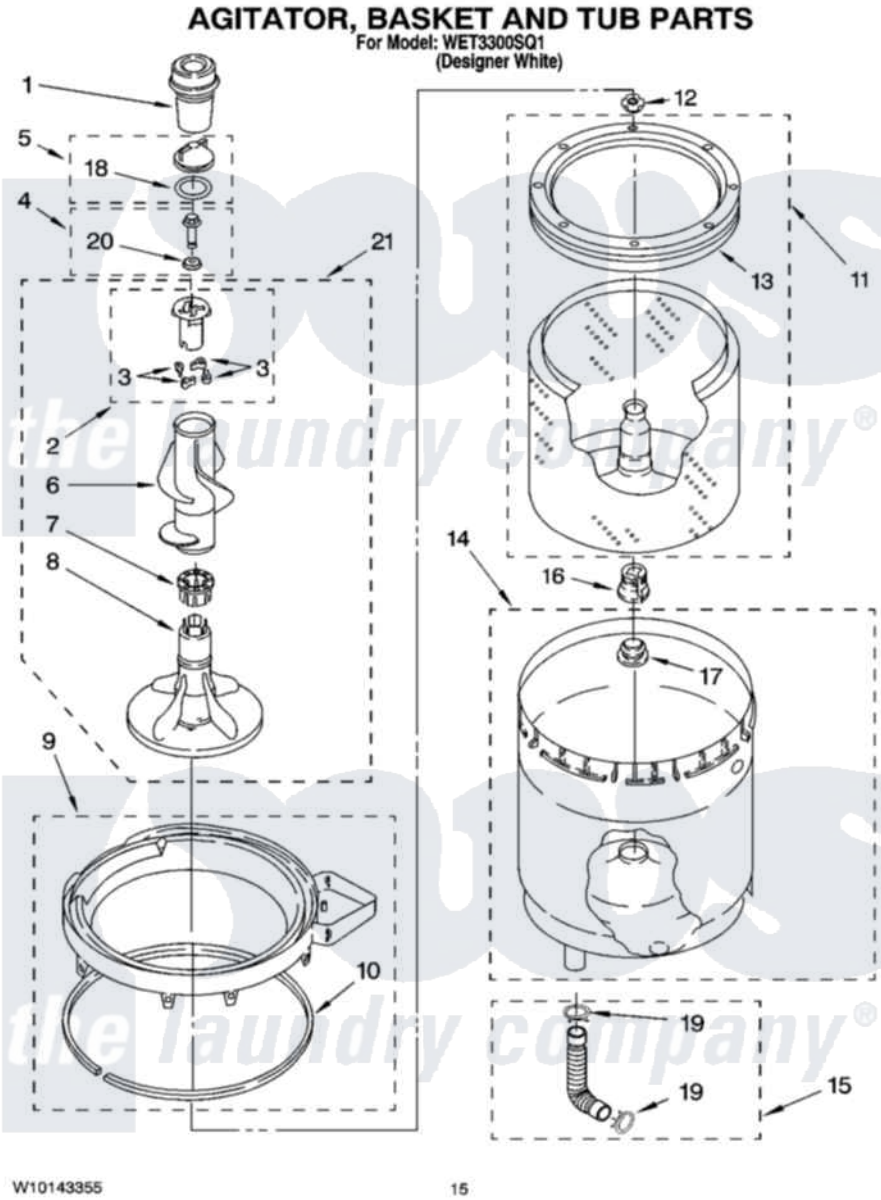

Whirlpool Residential Whirlpool WET3300SQ1 Washer/Dryer Parts Parts Diagram 10 - AGITATOR, BASKET AND TUB PARTS
Click on the part number to view part

Item	Original Part Number	Replaced By	Status	Part Description
1	3350834			Dispenser,
2	3947410	285751		Dog-Agitator
3	3366877	80040		Dog-Agitator
4	358237			Screw And Washer
5	387094	285550		Cap
6	3349610			Mover, Agitator Clutch
7	3351014	285620		Washer
8	3349578			Agitator
9	8528150	W10445870		Ring-Tub
10	3976308			Gasket, Tub Ring
11	3979385	3352234		Basket And Balance Ring Assembly
12	21366			Nut, Spanner
13	8519788	387240		Ring, Balance
14	3349292			Tub
15	3951449	285871		Hose

16	389140		Tub Block, Basket Drive
17	383727		Gasket, Centerpodt
18	3348855	W10072840	Fabric Softener
19	3363366	616099	Clamp
20	3949550		Washer
21	3349743		Agitator

the laundry company®

the laundry company®

the laundry company®