Whirlpool WFW9200SQA12 03 - CONTROL PANEL PARTS

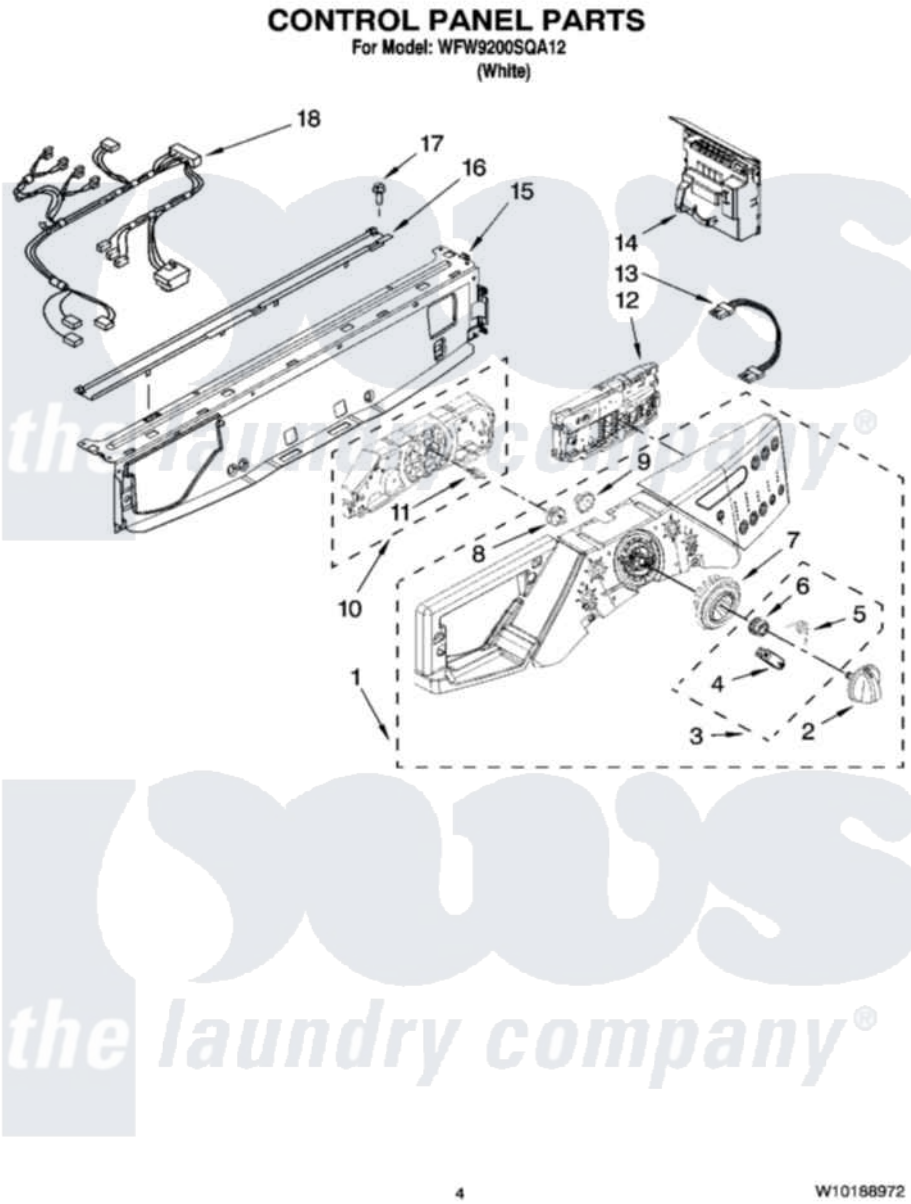

Whirlpool Residential Whirlpool WFW9200SQA12 Washer Parts Parts Diagram 03 - CONTROL PANEL PARTS
Click on the part number to view part

Item	Original Part Number	Replaced By	Status	Part Description
1	8183228			Panel, Control
2	W10131368			Knob, Control
3	W10133927			Wheel, Detent Kit
4	W10131661	W10133927		Wheel, Detent Kit
5	W10131377	W10133927		Wheel, Detent Kit
6	W10131378	W10133927		Wheel, Detent Kit
7	W10131376	W10012410		Knob, Light Ring
8	W10131381			Wheel, Encoder
9	W10131382	W10012440		Retainer-Snap
10	W10168596	W10319816		Control-Elec
11	8183177			Adapter, Encoder Wheel
12	W10168597	W10319816		Control-Elec
13	W10203273	8183254		Harness, Wiring
14	W10161727	W10179012		Control-Elec
15	W10059240			Brace, Front Top
16	W10003700	8183204		Channel, Water

17	W10015090	489442	Screw 3 2217757 Roller, Front
18	W10159723	W10204695	Harns-Wire

the laundry company®
the laundry company®
the laundry company®