Whirlpool WFW9400STA10 01 - TOP AND CABINET PARTS

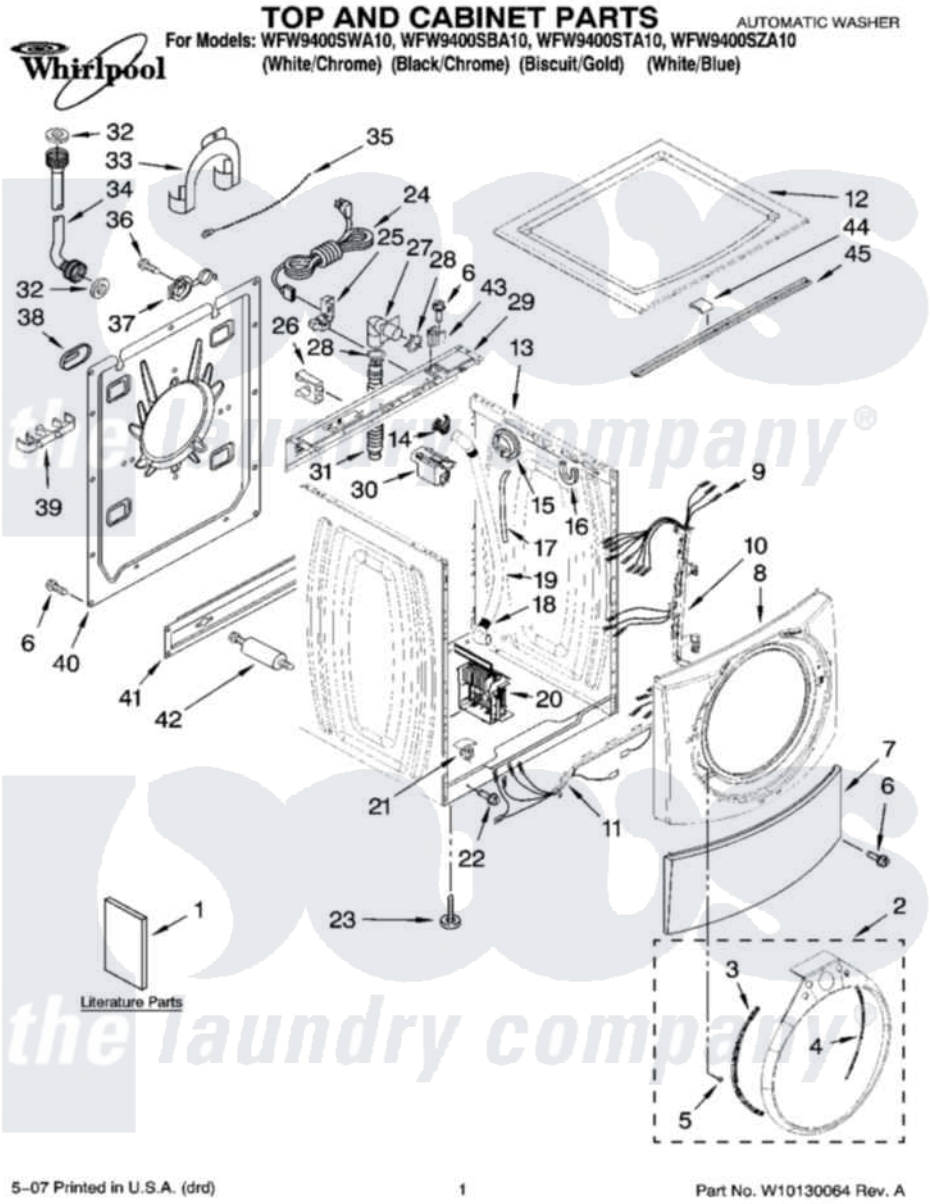

Whirlpool Residential Whirlpool WFW9400STA10 Washer Parts Parts Diagram 01 - TOP AND CABINET PARTS
Click on the part number to view part

Item	Original Part Number	Replaced By	Status	Part Description
1	8183052			Use And Care Guide
"	8183018		Not Available	Tech Sheet
"	W10114111		Not Available	Energy Guide
"	8183017		Not Available	Quick Start Guide
2	W10068780	8183223		Trim Ring, Teardrop Assembly
"	W10068820	8183225		Trim Ring, Teardrop Assembly
"	W10068790	8183224		Trim Ring, Teardrop Assembly
"	W10068830	8183226		Trim Ring, Teardrop Assembly
3	W10015770	8183208		Bracket, Trim Fixation
4	W10015780	8183209		Bracket, Trim Fixation
5	W10029650	8183210		Clip, Trim
6	W10015090	489442		Screw 3 2217757 Roller, Front
7	W10003640	8181643		Toe Panel
"	W10115651			Toe Panel
"	W10115654		Not Available	Toe Panel (Biscuit)
8	W10015580	W10015590		Panel

"	W10116514			Panel, Front
"	W10116515		Not Available	Panel, Front (Biscuit)
9	W10116562			Harness, Wiring
10	W10003460	W10216383		Channel, Harness
11	W10047920	W10168549		Channel, Harness
12	W10003920	W10003900		Top
"	W10115611		Not Available	Top (Black)
"	W10115612		Not Available	Top (Biscuit)
13	W10002880			Cabinet
"	W10117088			Cabinet
"	W10117089		Not Available	Cabinet (Biscuit)
14	W10003290	8182209		Retainer, Drain Hose
15	W10065150	W10163982		Switch, Pressure
16	W10008890	8181763		Bracket, Spring
17	W10004260			Hose, Pressure Switch
18	W10003250			Hose, Drain-Inner
19	W10004320			Sleeve, Drain Hose
20	W10015480	W10384846		Motor Control Unit
21	8540210	W10085220		Microswitch
22	8540479			Screw, Grounding
23	W10064810			Foot, Leveling
24	W10110674	8183009		Cord, Power
25	W10110676	8182635		Strain Relief
26	W10022290	8182702		Clip, Outer Hose Holder
27	W10003260	8181738		Connector, Hose Outlet
28	356138			Clamp, Hose
29	W10110677			Brace, Rear
30	8540230	W10339736		Filter, Interference
31	W10003280	8181737		Hose, Drain
32	16123			Washer Inlet-Hose Miscellaneous Parts Must be Ordered Separately.
33	8540021	W10280024		U-Bend, Drain Hose
34	8571377	89503		Hose-Inlet
"	8571378	89503		Hose-Inlet
35	3347868	W10339879		Tie, Cable
36	8540727	8182201		Screw, 3 X 8 mm
37	8540728	8182699		Grommet, Cord Support
38	8540268			Cover, Transport
39	W10003270	8182701		Clip, Outer Hose Holder
40	W10003030			Panel, Rear
41	W10003040			Brace, Transport
42	W10003340	W10289554A		Bolt
"	W10003350	W10289554A		Bolt
43	W10123373			Spacer, Top
44	8283273			Damper, Brace
45	8540720			Brace, Top

the laundry company®