Whirlpool WGD9051YW1 01 - TOP AND CONSOLE PARTS

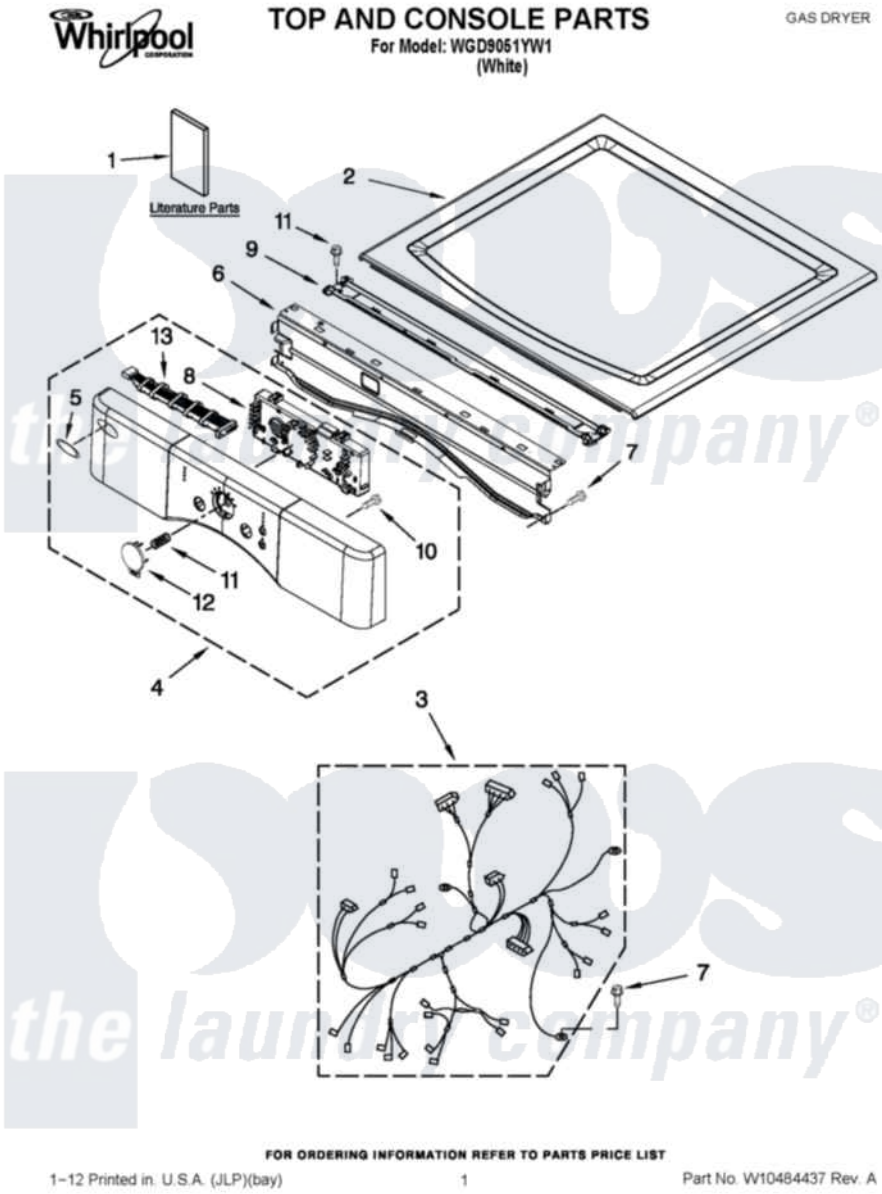

Whirlpool Residential Whirlpool WGD9051YW1 Dryer Parts Parts Diagram 01 - TOP AND CONSOLE PARTS
Click on the part number to view part

Item	Original Part Number	Replaced By	Status	Part Description
1	W10296184		Not Available	USE & CARE GUIDE
"	W10443045		Not Available	INSTALLATION INSTRUCTIONS
"	W10443109		Not Available	TECH SHEET
2	W10336080			Top
3	W10251443			Harness, Main
4	W10444970			Panel, Console Assembly
5	W10117943	8303811		Badge, Assembly
6	8565237			Bracket, Console
7	3390647	488729		Screw
8	W10444971		Not Available	ASSEMBLY, USER INTERFACE
9	W10266747			Channel-Water, Dryer
10	W10006580			Screw, M3-1.12 X12 Pn 6l Spl
11	W10215807			Spring, Cycle Button
12	W10212800			Button, Cycle
13	W10259049			Cable, User Interface