Whirlpool WGD94HEXL2 04 - W10307147 BURNER ASSEMBLY

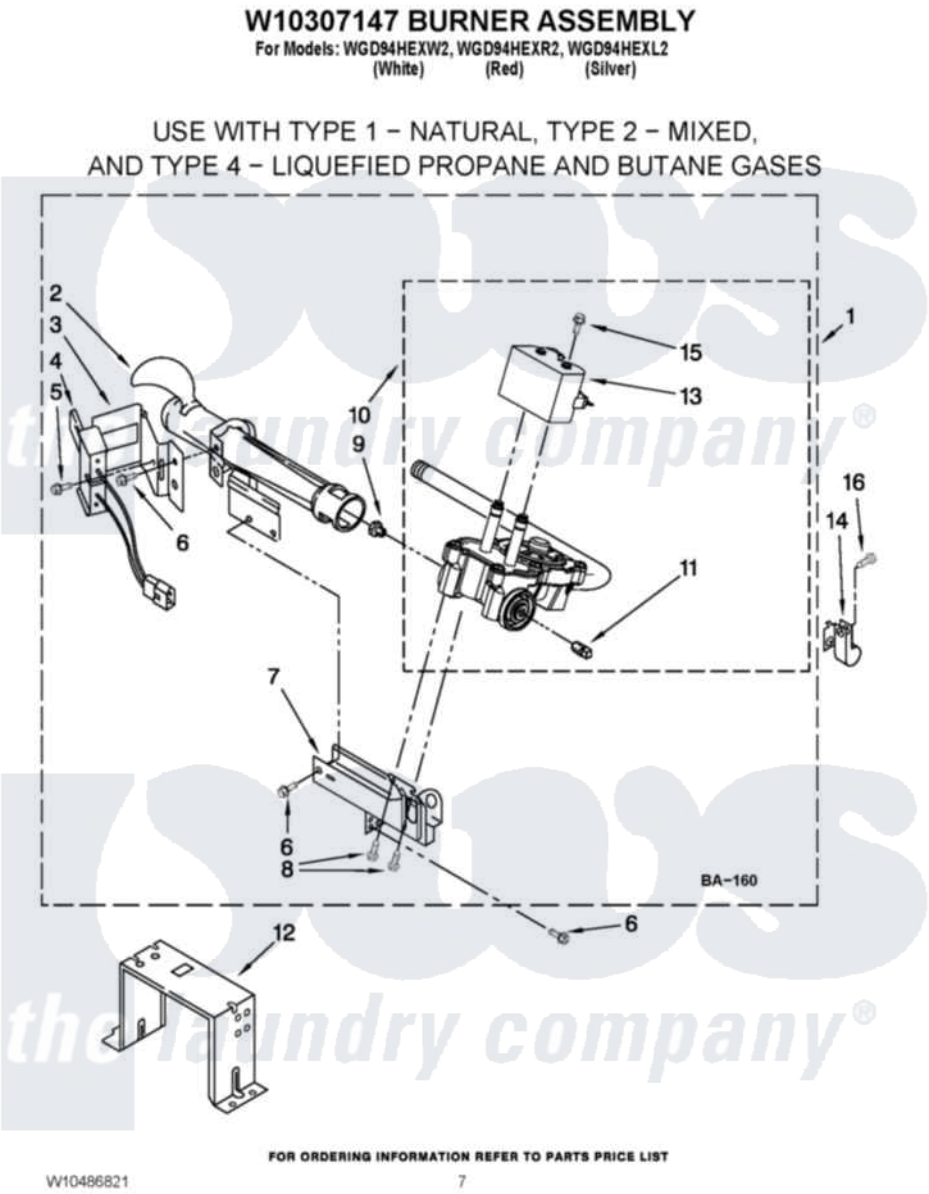

Whirlpool Residential Whirlpool WGD94HEXL2 Dryer Parts Parts Diagram 04 - W10307147 BURNER ASSEMBLY
Click on the part number to view part

Item	Original Part Number	Replaced By	Status	Part Description
1	W10307147	W10353165		Burner-Gas
2	688617	693140		Burner
3	694298			Bracket, Ignitor
4	686590	279311		Ignitor
5	3393909			Screw, 8-32 X 7/8
6	343641	681414		Screw, 10AB X 1/2
7	3389871		Not Available	Base, Burner
8	3387057			Screw, 10-16 X 1/2 Orifice, Burner
9	15418			Orifice, Burner Type 1
10	W10175144	W10293912		Valve-Gas
11	W10295523			Plug, Pipe
12	3389889			Bracket, Support
13	W10328463			Coil, 60 Hz
14	3978776			Bracket, Gas Pipe Switch
15	326049536			Screw, Coil
16	3390647	488729		Screw

the laundry company®

the laundry company®

the laundry company®