Whirlpool WGD94HEXR1 02 - CABINET PARTS

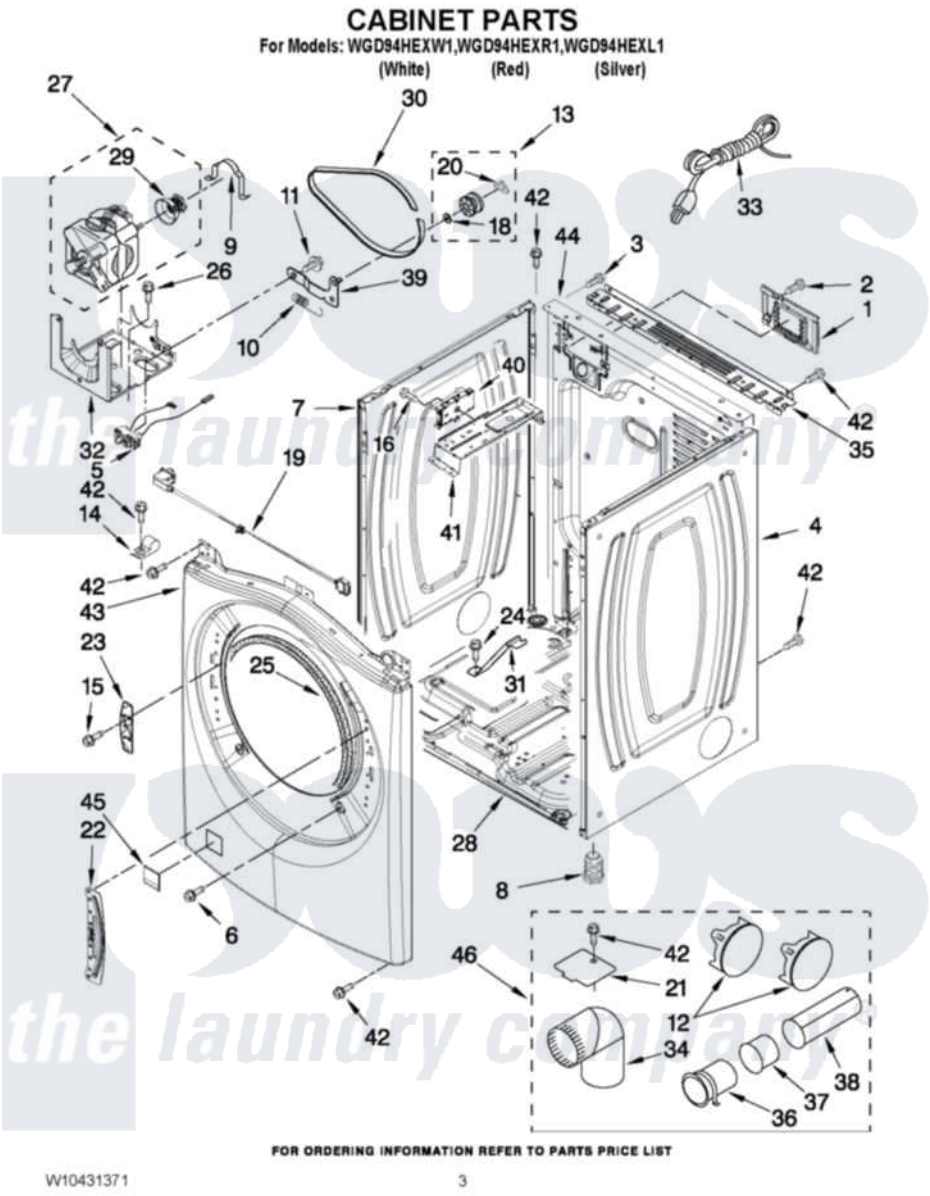

Whirlpool Residential Whirlpool WGD94HEXR1 Dryer Parts Parts Diagram 02 - CABINET PARTS
Click on the part number to view part

Item	Original Part Number	Replaced By	Status	Part Description
1	8317339			Cover, Terminal Block
2	3390814	90767		Screw, 8A X 3/8 HeX Washer Head Tapping
3	8533974	4331106		Screw, No.10-32 X 7/16
4	W10280028			Panel, Side
"	W10337791			Panel, Side
"	W10249725			Panel, Side
5	W10246525	W10314253		Switch, Assembly Broken Belt
6	3357011	308685		Side Trim)
7	W10192435			Panel, Side
"	W10337789	W10468502		Panel, Side
"	W10249727			Panel, Side
8	3392100	49621		Feet-Leveling
NI	279810			Foot-Optional
9	W10121316			Plug, Multivent
10	3387374			Spring, Idler
11	3389420			Retainer-Idler 1/4-20 X 1/16

12	49252		Plug, Multivent
"	W10151499	W10404617	Plug, Multivent
13	3388672	279640	Pulley-Idr
14	3978776		Bracket, Gas Pipe Switch
15	W10288126		Screw, 10-32 X 1/2
16	90767		Screw, 8A X 3/8 HeX Washer Head Tapping
18	W10121334		Washer, Thrust
19	W10267834		Door Switch Assembly
20	690997		Washer, Thrust
21	8066115	3394331	Plate Cover
22	W10208218		Bracket, Door Hinge
23	W10208250		Strike, Door
24	693995		Screw, Hex Head
25	3387242		Seal, Front Panel
26	343641	681414	Screw, 10AB X 1/2
27	8538263	279787	Motor-Drve
28	8565046		(BROKEN BELT BASE, CABINET SWITCH)
29	8578220		Pulley, Motor
30	3387610	661570	Belt
31	8529757		Bracket, Burner
32	W10242878		Bracket, Motor Mounting
33	3401401	3401402	Cord, Power
34	49026		4" - 90° Elbow
35	W10208382		Bracket, Rear Dryer
36	8563747		Exhaust Pipe Medium Pipe
37	8563750		Exhaust Pipe
38	8563749		Exhaust Pipe
39	3388674	W10118756	Idler Bracket
40	W10326372		Control Board
41	W10259611		Bracket, Control
42	3390647	488729	Screw
43	W10208192		Front Panel
"	W10337783		Front Panel
"	W10316296		Front Panel
44	W10247569		Panel, Rear
45	8564457		Plug, Front Panel
"	W10256411		Plug, Front Panel
"	W10249704		Plug, Front Panel
NI	W10331132		Dryer Exhaust Kit

the laundry company®