Whirlpool WGT3300SQ1 03 - DRYER CABINET AND MOTOR PARTS

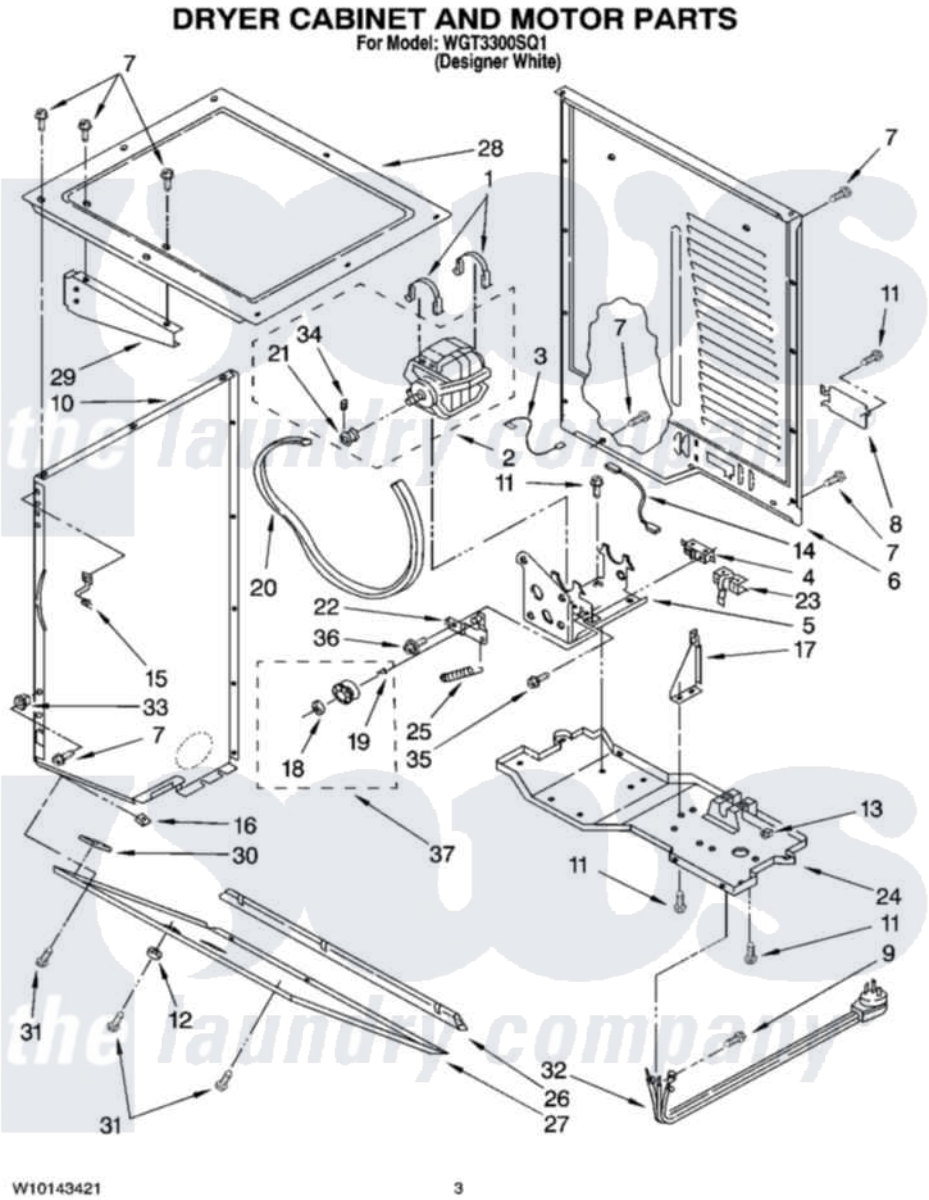

Whirlpool Residential Whirlpool WGT3300SQ1 Washer/Dryer Parts Parts Diagram 03 - DRYER CABINET AND MOTOR PARTS
Click on the part number to view part

Item	Original Part Number	Replaced By	Status	Part Description
1	660658			Clamp, Motor Mounting 343481 685441
2	8538266	279811		Motor-Drve
3	3398948			Wire, Jumper
4	3394881	279782		Switch-Lid
5	3388858			Bracket, Motor
6	3389847	280039		Panel
7	343641	681414		Screw, 10AB X 1/2
8	3387673	279814		Cover
9	8533971	90767		Screw, 8A X 3/8 HeX Washer Head Tapping
10	3389264			Panel, Side
"	3389256			Panel, Side
11	3390631			Screw, 10-16 X 3/8
12	3389431			Bumper, Lid Stop
13	697438			Clip

14	3394081			Wire, Broken Belt Switch
15	3389231			Clip, Front Panel
16	98234			Clip, U-Bend
17	3391639			Bracket, Bulkhead
18	690997			Washer, Thrust
19	W10121334			Washer, Thrust
20	3387610	661570		Belt
21	3391087	279811		Motor-Drve
22	3389332	3389331		Pulley, Idler
23	8066120			Lever, Door Switch
24	3391668			Base, Dryer
25	3387374			Spring, Idler
26	3389683			Cove, Transition Panel
27	3389272			Panel, Transition
28	3389537			Top, Dryer
29	3390722			Shield, Console To Drum
30	3389682			Space-Toe Panel User-Interface
31	693304			Screw And Washer
32	694018	W10239314		Cord, Power
33	692400			Nut, Push-In
34	3394743		Not Available	Pin, Roll
35	98129			Screw, 6-20 X 1 1/16
36	3389420			Retainer-Idler 1/4-20 X 1/16
37	3388672	279640		Pulley-Idr

the laundry company®
the laundry company®
the laundry company®