Whirlpool WTW4910XQ1 01 - TOP AND CABINET PARTS

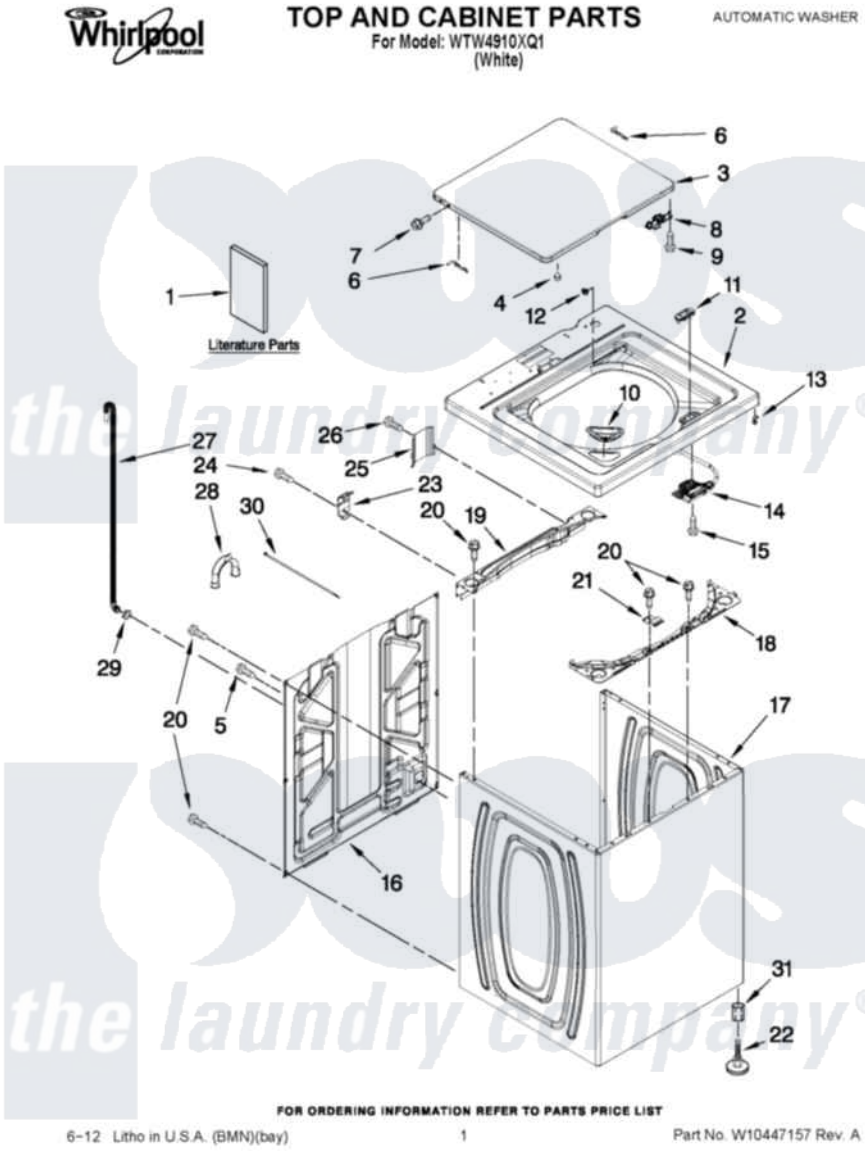

Whirlpool Residential Whirlpool WTW4910XQ1 Washer Parts Parts Diagram 01 - TOP AND CABINET PARTS
Click on the part number to view part

Item	Original Part Number	Replaced By	Status	Part Description
1	W10240509			Installation Instructions
"	W10280544		Not Available	USE & CARE GUIDE
"	W10280489		Not Available	INSTALLATION (TECH SHEET)
"	W10062947		Not Available	ENERGY GUIDE
2	W10251299			Top
3	W10251302	W10338625		Lid
4	9724509			Bumper, Lid
5	9740848			Screw, Mixing Valve Mounting
6	91770			Hinge, Lid
7	W10119872	W10119828		Screw, Lid Hinge Mounting
8	W10240513			Strike, Lid Lock
9	W10273971			Screw, 6-19 X 1/2
10	W10192089			Dispenser, Bleach
11	W10392041			Bezel, Lid Lock
12	21258			Bearing, Lid Hinge
13	90016			Clip, Pressure Switch Hose

14	W10238287	W10404050	Latch
15	8281163		Screw, Dispenser Housing Mounting
16	W10250884		Panel Rear
17	W10251994	W10338650	Cabinet
18	W10215098		Brace, Cabinet Top Front
19	W10215099		Brace, Cabinet Top Rear
20	1157158	489069	Xxscrew, 10-12 X 1/2
21	W10248088		Lock, Top
22	W10335586	W10397767	Foot Assembly, Leveling
23	W10215102		Hinge, Top
24	W10142728	3370225	Screw
25	W10215139		Cover, Harness
26	3400076		Screw, Bracket Mounting
27	W10221546		Hose, Outer Drain Assembly
28	W10280024		U-Bend, Drain Hose
29	356138		Clamp, Hose
30	W10339879		Tie, Cable
31	3359452		Nut, Lock

the laundry company®
the laundry company®