Whirlpool WTW57ESVW0 02 - CONTROLS AND REAR PANEL PARTS

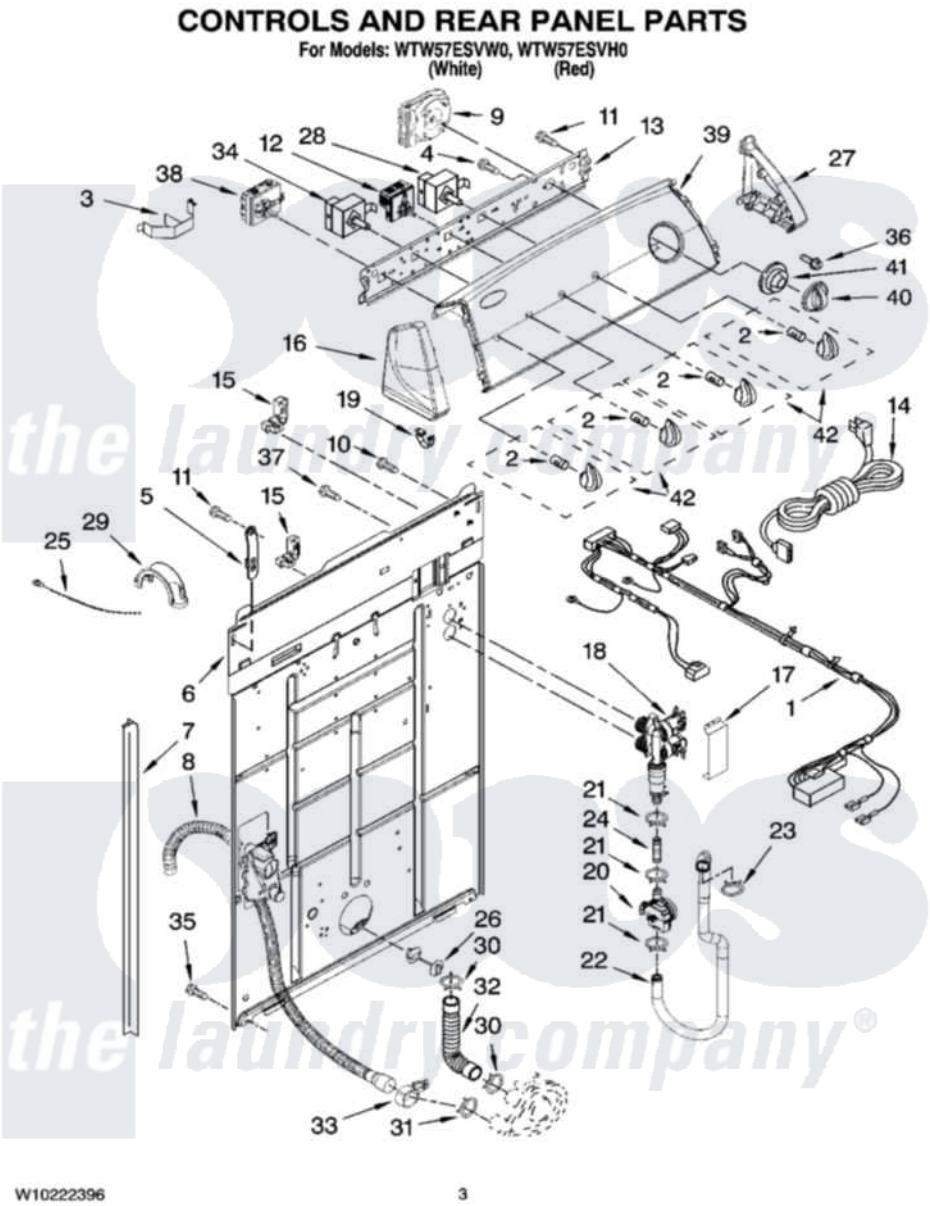

Whirlpool Residential Whirlpool WTW57ESVW0 Washer Parts Parts Diagram 02 - CONTROLS AND REAR PANEL PARTS
Click on the part number to view part

Item	Original Part Number	Replaced By	Status	Part Description
1	W10180973			Harness, Wiring
2	8536939			Clip, Knob
3	8055003			Clip, Harness And Pressure Switch
4	3400073			Screw, Ground
5	8568314			Strap, Console
6	W10194451			Panel, Rear
7	62747			Pad, Rear Panel
8	W10189267			Drain Hose Assembly
9	W10177827			Timer, Control
10	3351614			Screw, Gearcase Cover Mounting
11	90767			Screw, 8A X 3/8 HeX Washer Head Tapping
12	W10177795	W10292584		Switch-Sen
13	8566003			Bracket, Control
14	8578842	285800		Cord-Power

15	3952821	285777	Relief-Str
16	8566035	8565957	Cap, End
"	W10205959		Cap, End
17	W10188372		Shield, Suds
18	W10175893		Valve, Water Inlet
19	8312709		Clip-Console
20	W10176591		Flowmeter
21	W10185367		Clamp, Hose
22	W10166732		Hose, Flowmeter To Tub Ring
23	W10117298	596669	Clamp, Manifold
24	W10166731		Hose, Valve To Flowmeter
25	3347868	W10339879	Tie, Cable
26	8519200		Support, Rear Panel
27	8566032	8565954	Cap, End
"	W10205953		Cap, End
28	W10180780		Switch, Rotary
29	8577378		U-Bend, Drain Hose
30	3363366	616099	Clamp
31	8317496	285655	Clamp, Hose
32	3951449	285871	Hose
33	8541668		Clamp, Hose
34	3949187	W10168262	Switch, Rotary
35	62863	3390631	Screw, 10-16 X 3/8
36	3400818		Screw, Timer Mounting
37	9740848		Screw, Mixing Valve Mounting
38	W10179666		Switch, Water Temperature
39	W10196933		Panel, Console
40	W10034730		Knob, Timer
41	8566018		Dial,
42	W10034380		Knob, Control

the laundry company®