Whirlpool WTW7800XW4 01 - TOP AND CABINET PARTS

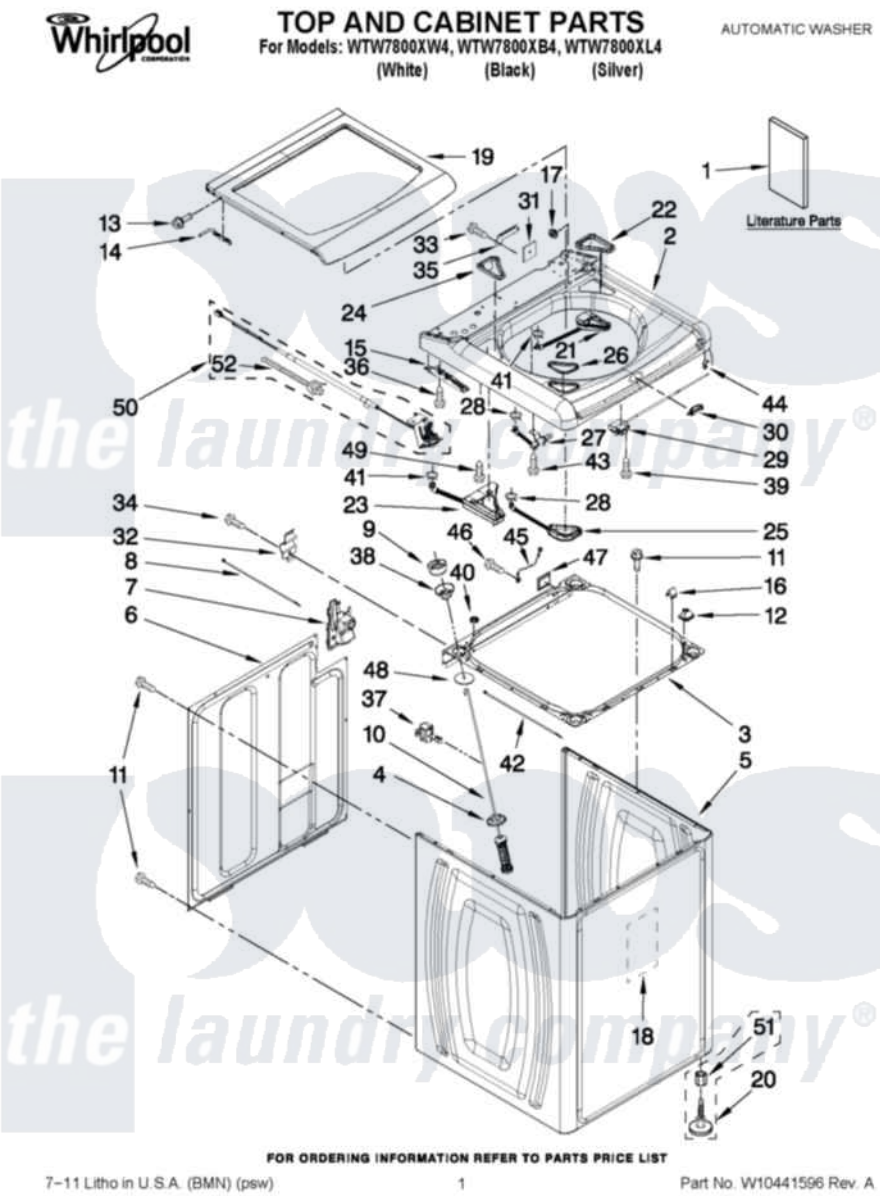

Whirlpool Residential Whirlpool WTW7800XW4 Washer Parts Parts Diagram 01 - TOP AND CABINET PARTS
Click on the part number to view part

Item	Original Part Number	Replaced By	Status	Part Description
1	W10240438		Not Available	Installation Instructions (English/French)
"	W10240439		Not Available	Installation Instructions (Spanish)
"	W10420499		Not Available	USE & CARE GUIDE
"	W10338694		Not Available	INSTALLATION INSTRUCTIONS (TECH SHEET)
"	W10385943		Not Available	INSTALLATION INSTRUCTIONS (ENERGY GUIDE)
2	3957177			Top
"	W10298629			Top
"	W10298630			Top
3	W10162604	W10198634		Frame
4	8564017			Cup, Suspension
5	8566097	W10434974		Cabinet
"	W10045598	W10193869		Cabinet
"	W10093798	W10193880		Cabinet

6	8566090		Panel, Rear
7	W10160572		Retainer, Drain Hose Storage
8	W10155270		Cable Tie
9	W10111536	W10198919	Kit
10	W10237427	W10247710	Suspension
11	1157158	489069	Xxscrew, 10-12 X 1/2
12	W10042120		Locator, Top
13	W10339706	W10078270	Screw, Lid Hinge Mounting
14	8563965		Hinge Wire
"	8572974		Hinge Wire
15	W10305275		Hinge, Spring Assembly
"	W10305276		Hinge, Spring Assembly
16	8563785		Lock, Top- Front
17	8546627		Bearing, Lid Hinge
18	W10414221		Cabinet, Damper Sound
19	W10349235		Lid, Glass Assembly
"	W10349135		Lid, Glass Assembly
"	W10349136		Lid, Glass Assembly
20	W10240448		Foot Assembly, Leveling
21	W10172146		Dispenser, Fabric Softener
22	W10136371		Bezel, Fabric Softener Dispenser
"	W10306027		Bezel, Fabric Softener Dispenser
23	W10187307		Dispenser, Stain Remover
24	W10131523		Bezel, Stain Remover Dispenser
"	W10306029		Bezel, Stain Remover Dispenser
25	W10172154		Dispenser, Detergent
26	8563877		Bezel, Detergent Dispenser
"	W10306028		Bezel, Detergent Dispenser
27	W10106990		Nozzle Assembly, Fresh Water
28	371503	596669	Clamp, Manifold
29	W10059230		Lock Assembly, Lid
30	8572019		Bezel, Lid Lock
"	W10052520		Bezel, Lid Lock
"	W10143661		Bezel, Lid Lock
31	W10161707		Top Foam Seal
32	8564456		Hinge, Top
33	3390647	488729	Screw
34	343641	681414	Screw, 10AB X 1/2
35	8563941		Cover, Harness
36	693995		Screw, Hex Head
37	8543784		Bracket, Drain Hose
38	W10167599	W10198919	Kit
39	8281136		Screw, 10-16 X 3/4
40	8576476		Spacer, Rear
41	370451	596669	Clamp, Manifold
42	W10063340	W10339879	Tie, Cable
43	3400061		Screw, Dispenser Housing Mounting
44	90016		Clip, Pressure Switch Hose
45	8281736	3184020	Wire

the laundry company®

46	3400076	Screw, Bracket Mounting
47	8578386	Shield, Wire Harness
48	8577896	Washer, Suspension Umbrella
49	693995	Screw, Hex Head
50	W10341737	Led Assembly
51	3400917	Nut, Jam
52	3391018	Tie Cable

the laundry company®
the laundry company®
the laundry company®